Made in Finland

Utu sauna cabin (SHU1212)

- Installation instructions



Table of contents SOP1212PF-sauna cabin			
Description	w*d*h / INFO	Quantity	Check
Wall-elements	(w*d*h)		
A	1200*72*2034	1 pc	
B	1170*72*2034	1 pc	
C	1200*72*2034	1 pc	
D	421*72*2034	1 pc	
Roof element	(w*d*h)		
R	1120*1160*64	1 pc	
Mouldings	(w*d*h)		
(outside) back corners, L-shape	21*52*2034 HT aspen	2 pcs	
door/wall joint (inside and outside)	45*15*1953 HT aspen	2 pcs	
(outside) front corners	88*28*2034 HT aspen	2 pcs	
Interior	(w*d*h)		
Bench support(s)	485*28*90 HT aspen	2 pcs	
Upper bench	1046*500*90 HT aspen	1 pc	
Bench skirt	1046*30*325 HT aspen	1 pc	
Lower bench (stool)	600*450*450 HT aspen	1 pc	
Back rest	1046*36*265 HT aspen	1 pc	
Heater guard	523*347*705 HT aspen	1 pc	
LEDLighting			
RGBW-LED tubes	width 1000	2 pcs	
Mounting clamps	metal clips	4 pcs	
LED power supply 24V, 90W	LED-PWS-24-90	1 pc	
All in one controller WTJ5	LC-CV-VP	1 pc	
Remote controller	LR-1Z	1 pc	
Heater (not included)			
Recommended heater Delta 2,7 kW	D36	not included	
Stones AC3000	5 - 10 cm	not included	
Glass door with wooden frames			
Door with alder frames and bronze glass	690*1953*72 (glass 620*1913)	1 pc	
Door handle	SAZ564	1 pc	
Counter part for magnet	ZVEL-259C	1 pc	
Front wall support 1212/1616	ZVEL-851	1 pc	
Ventilation			
AIR Vent, alder	SZ093LE	1 pc	
Air duct, chromium	ZVEL-10	1 pc	
Accessories			
Installation instructions	Y05-1318	1 pc	
Screws, nails and tools			
5*80 mm	(SS) Steinless steel	5 pcs	
5*80 mm	Zn	28 pcs	
4,5*45 mm	(SS) Steinless steel	25 pcs	
3*25 mm	(SS) Steinless steel	7 pcs	
1,7*45 mm	dyckert-nail, Zn	20 pcs	
17*10 mm	Frame plug, rubber, beige	8 pcs	
KTLP1	Glue bag	2 pcs	







Tools required

















Screws

SS = Steinless steel

Zn = Zink

Ss x * x mm



Zn x * x mm





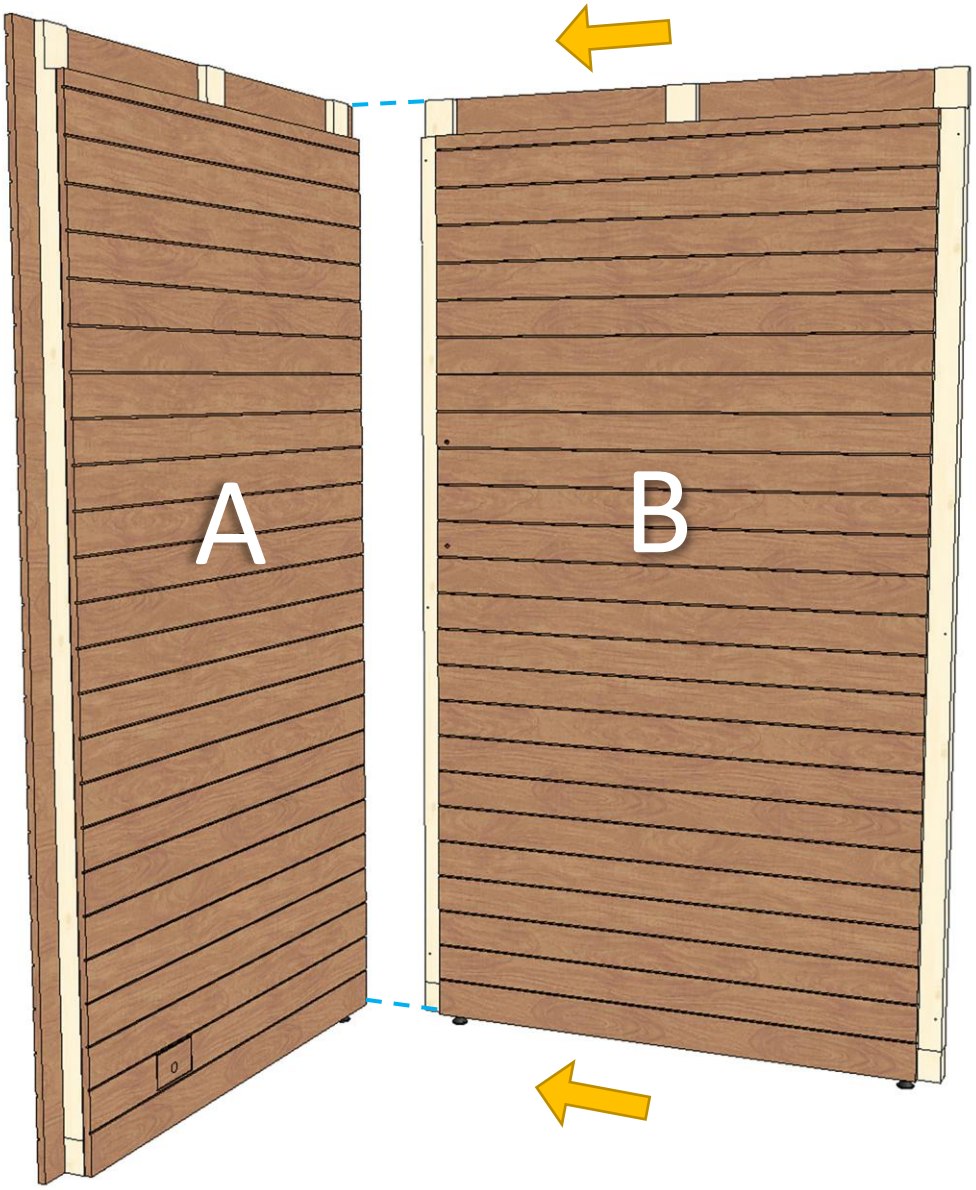
A
B

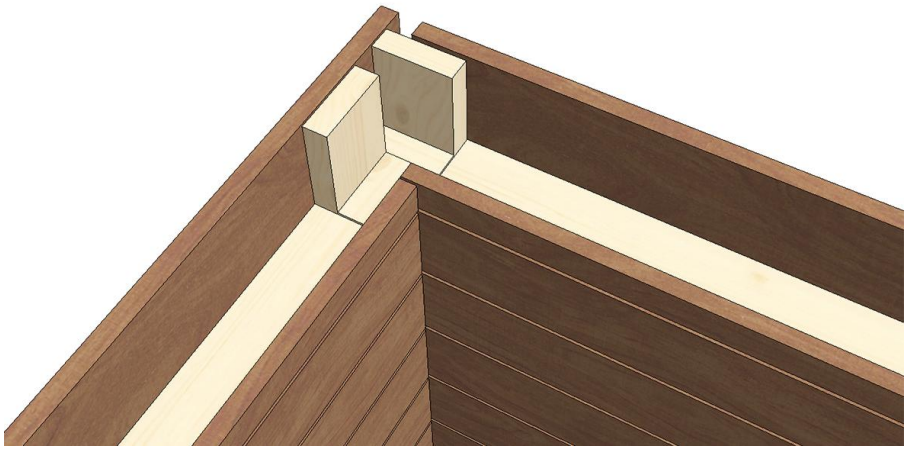

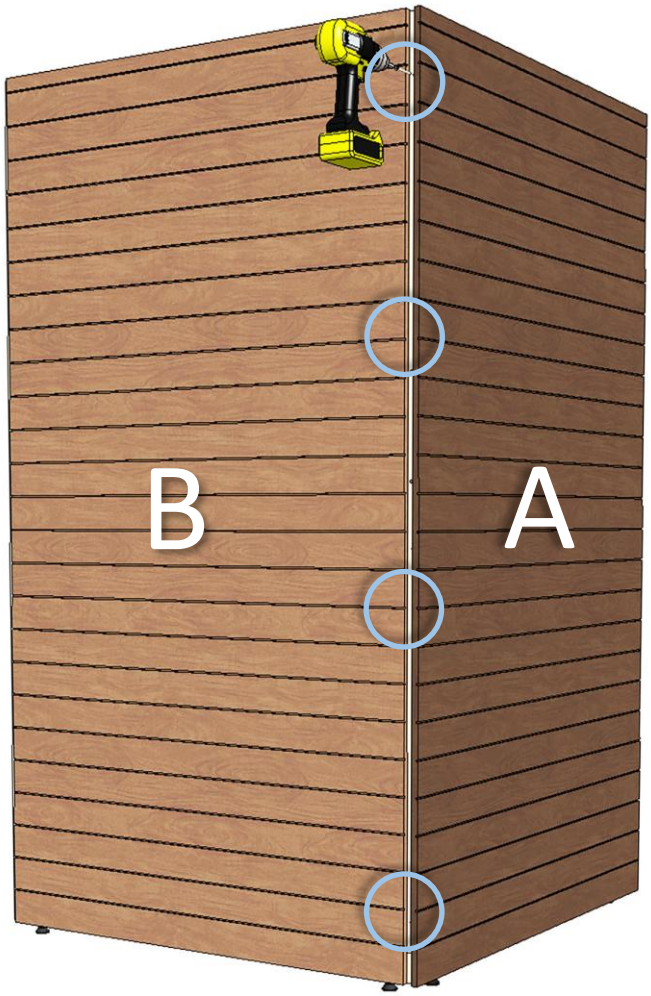



Zn 5 * 80 mm

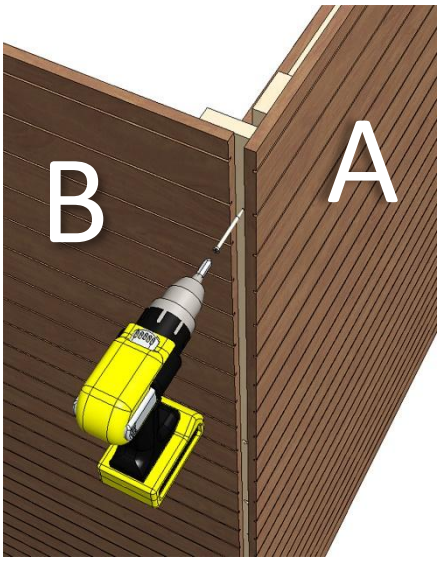

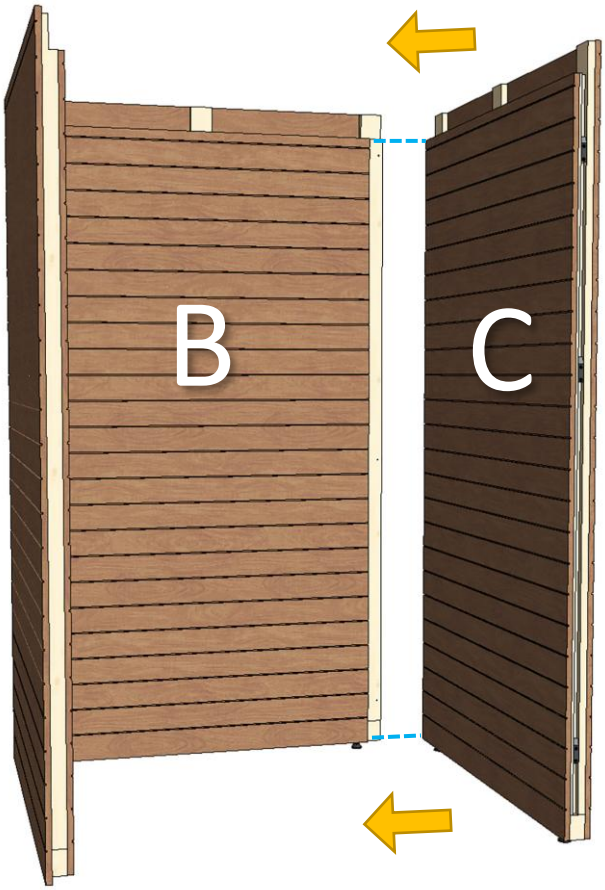

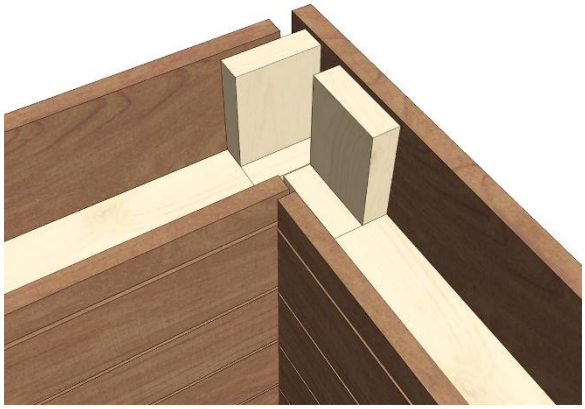

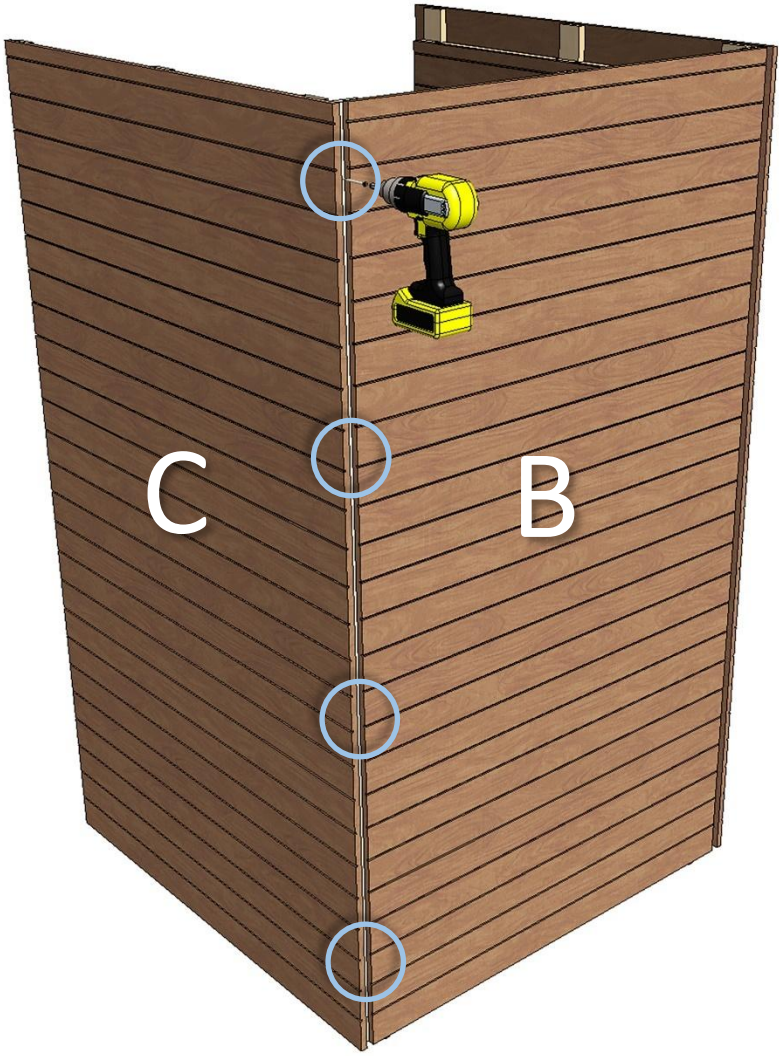



Zn 5 * 80 mm





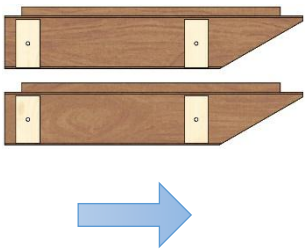

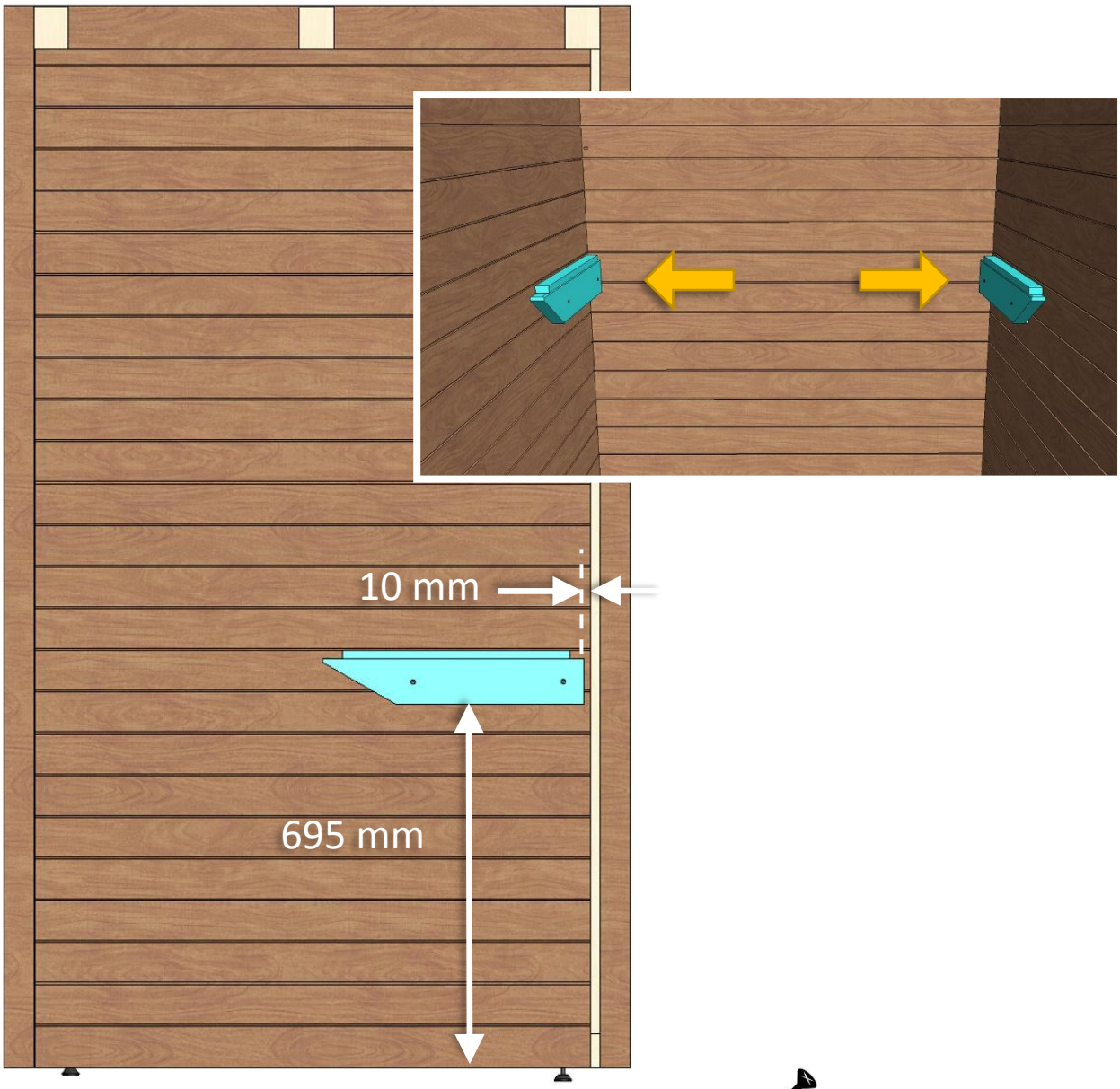

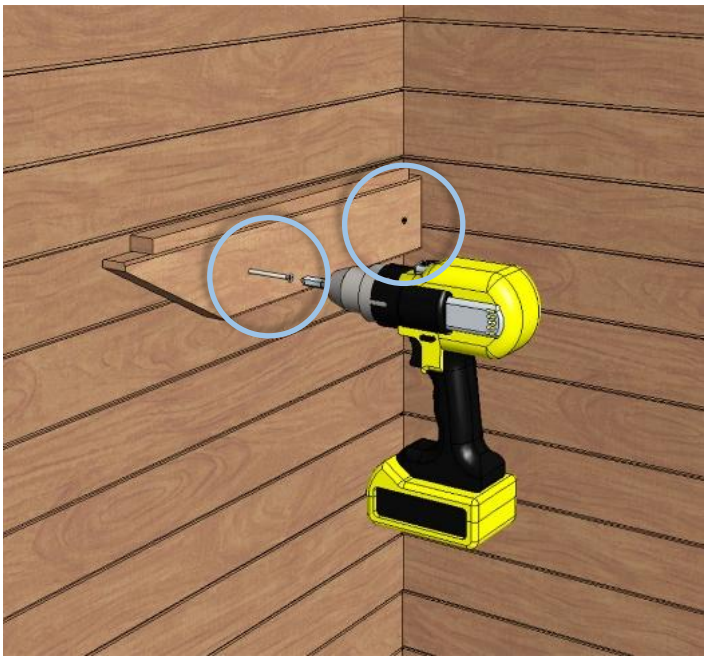



Ss 5 * 80 mm

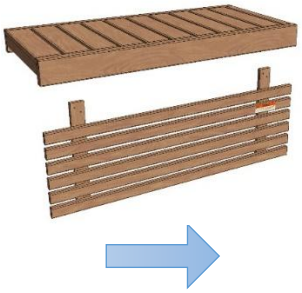

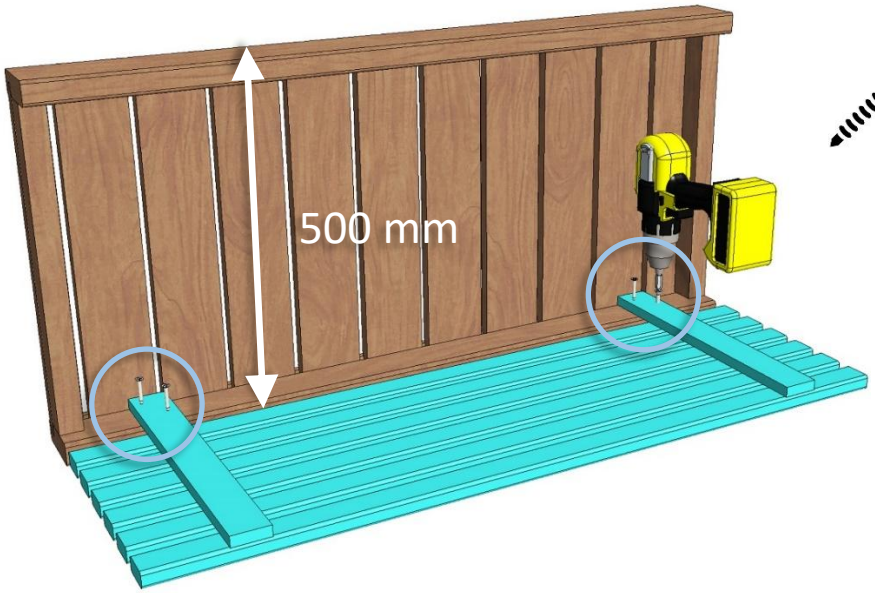



Ss 4,5 * 45 mm

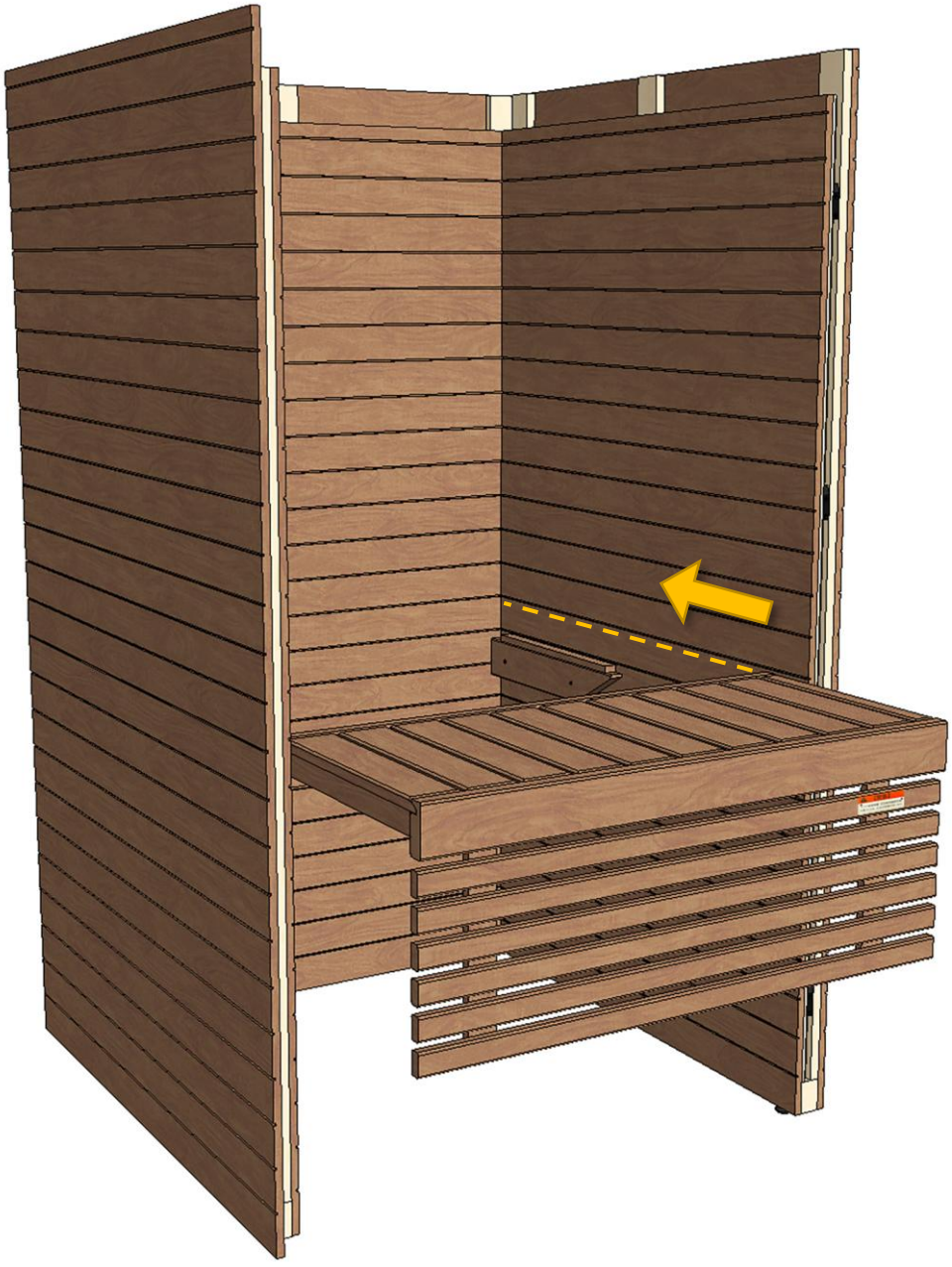

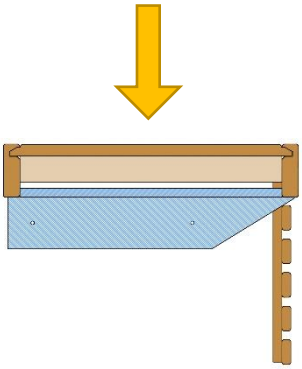

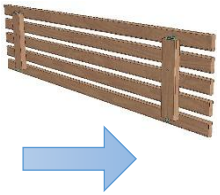

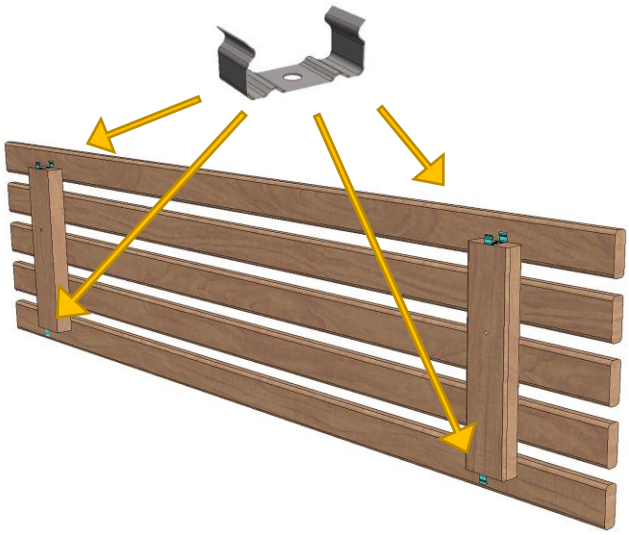

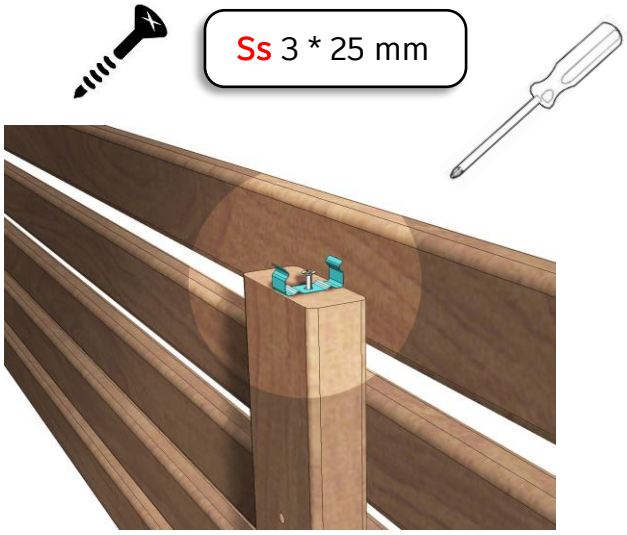

RGBW-LED 24V

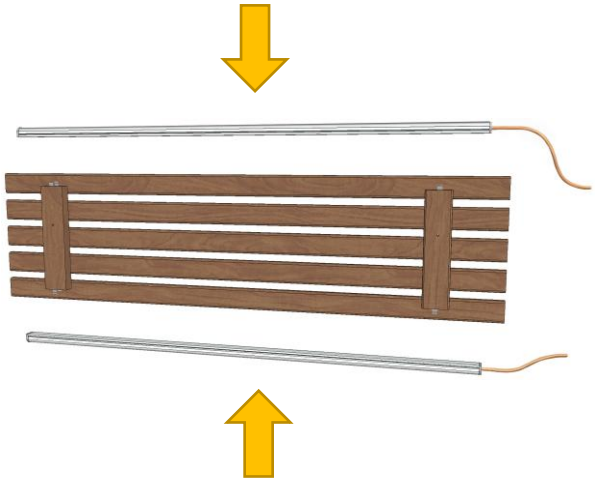



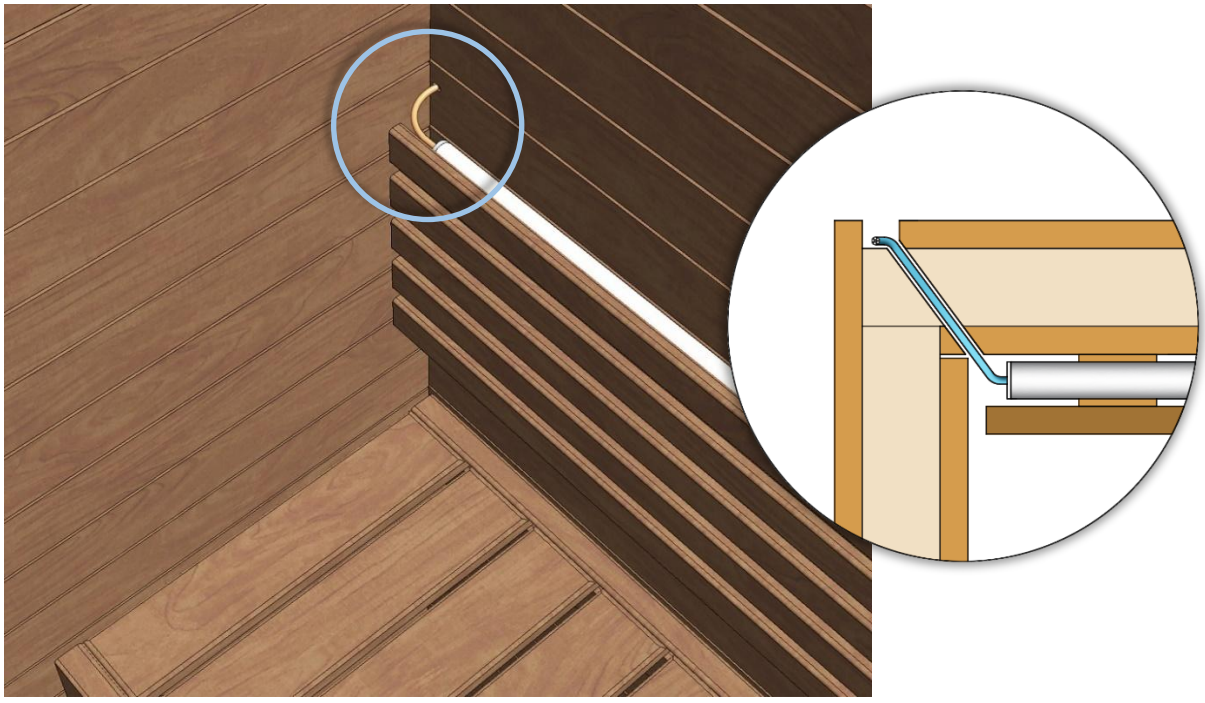

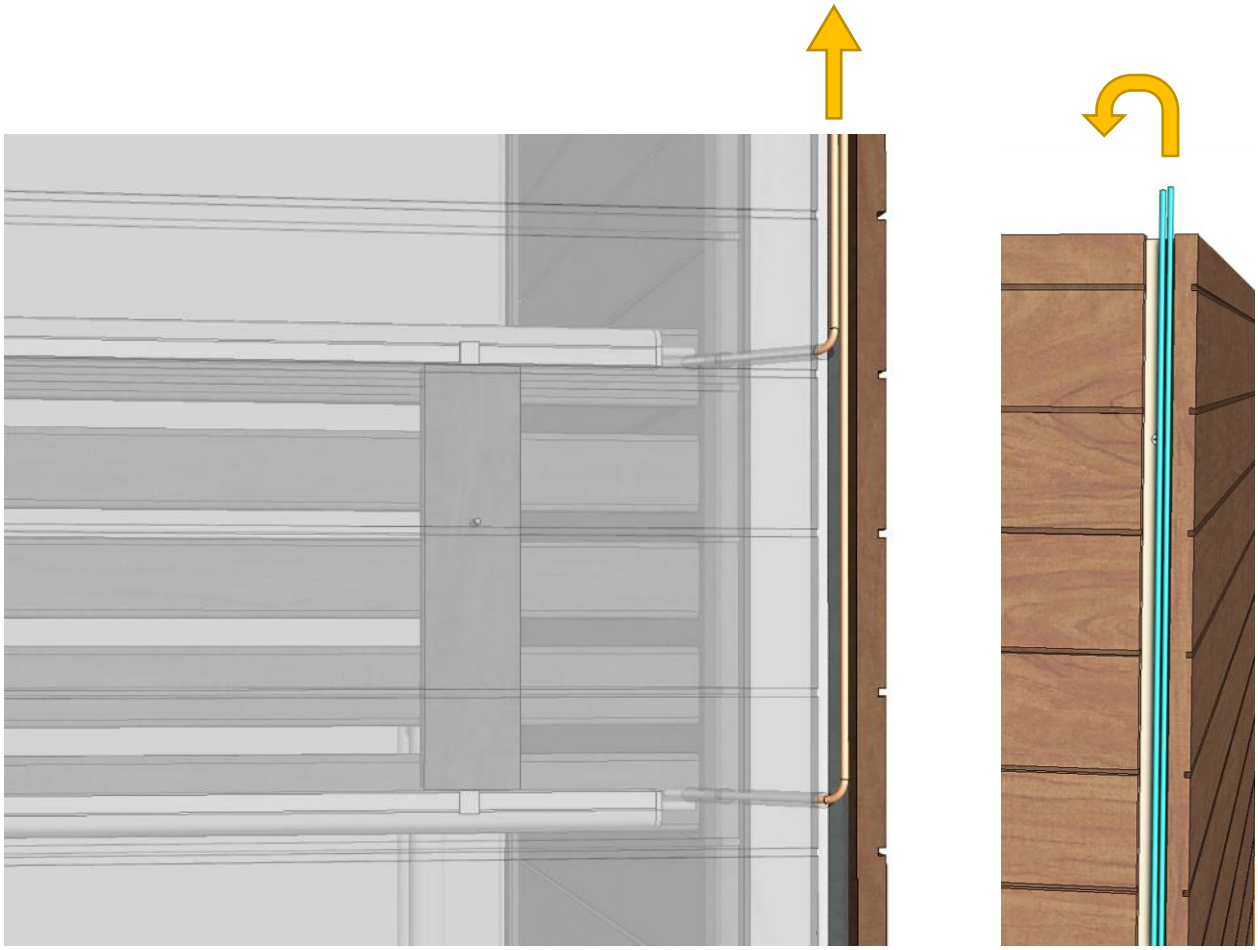



Ss 4,5 * 45 mm

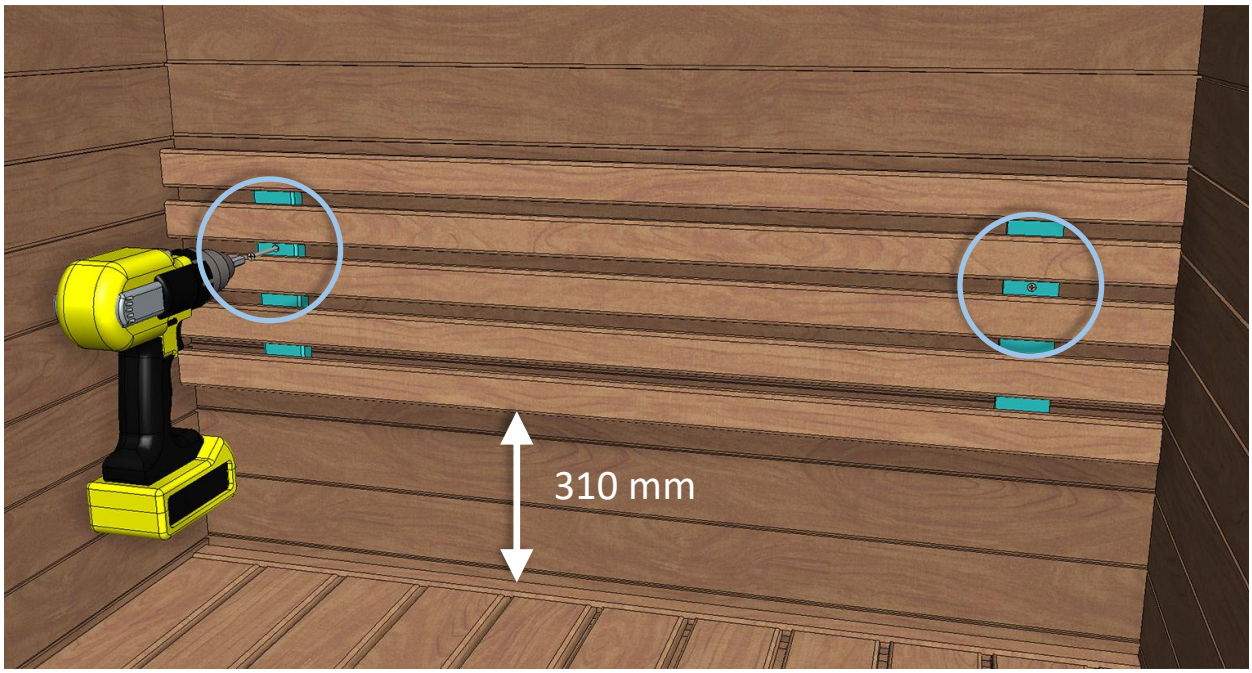

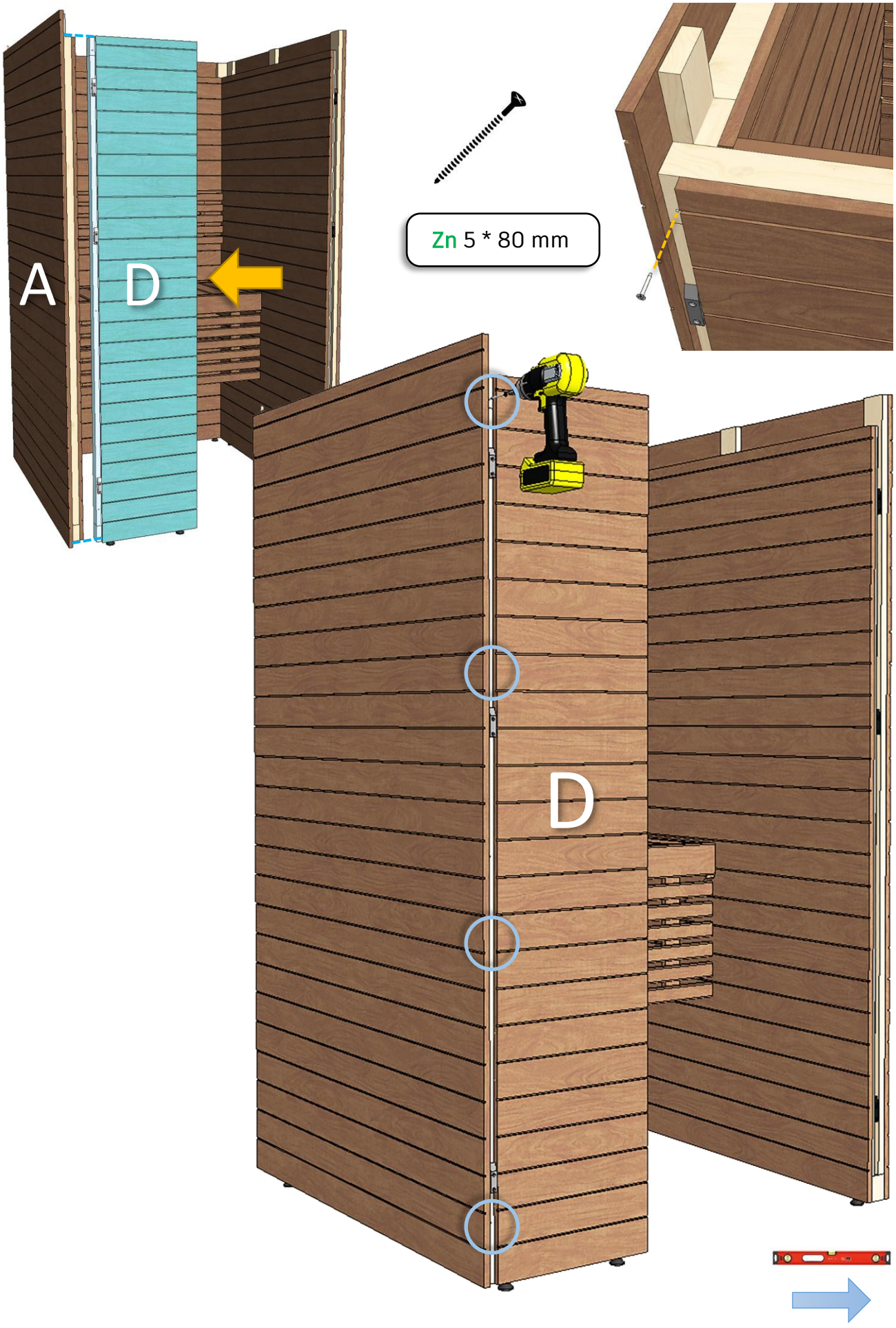
A
D
Zn 5 * 80 mm
D

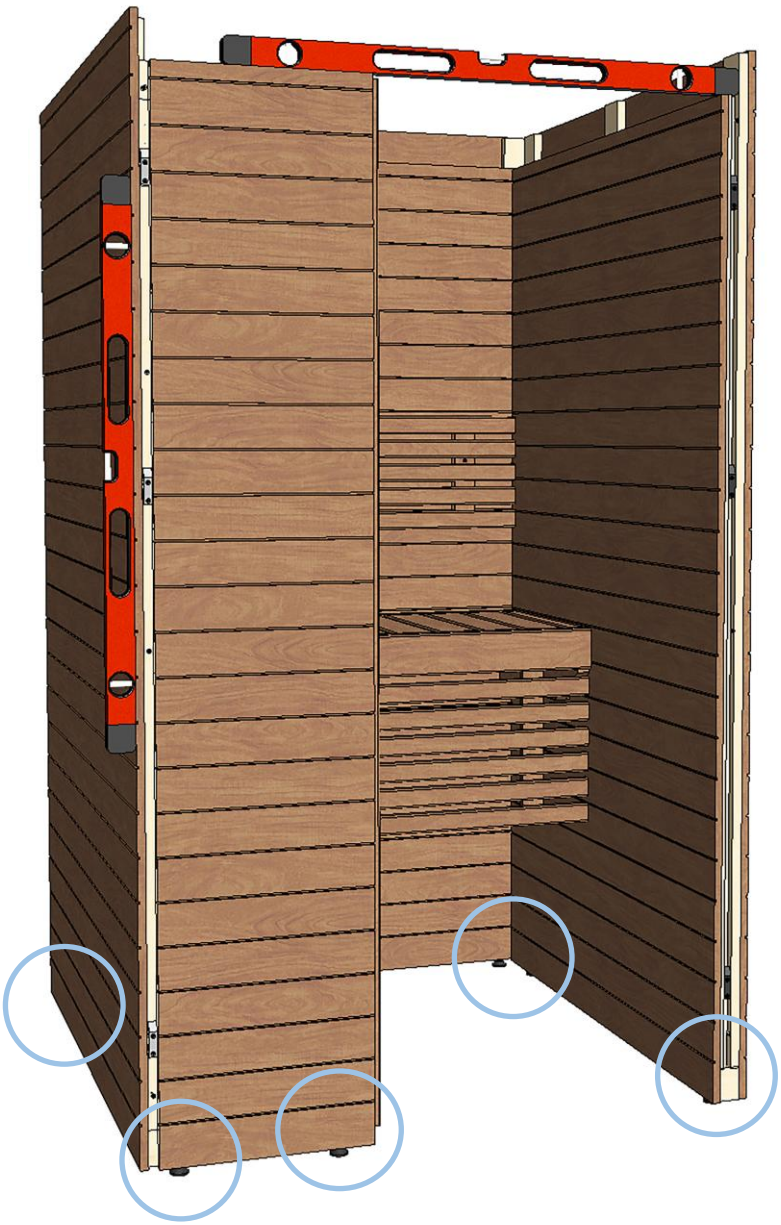

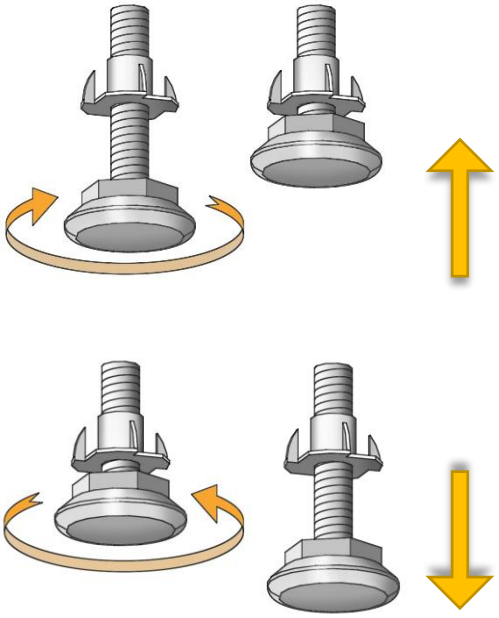

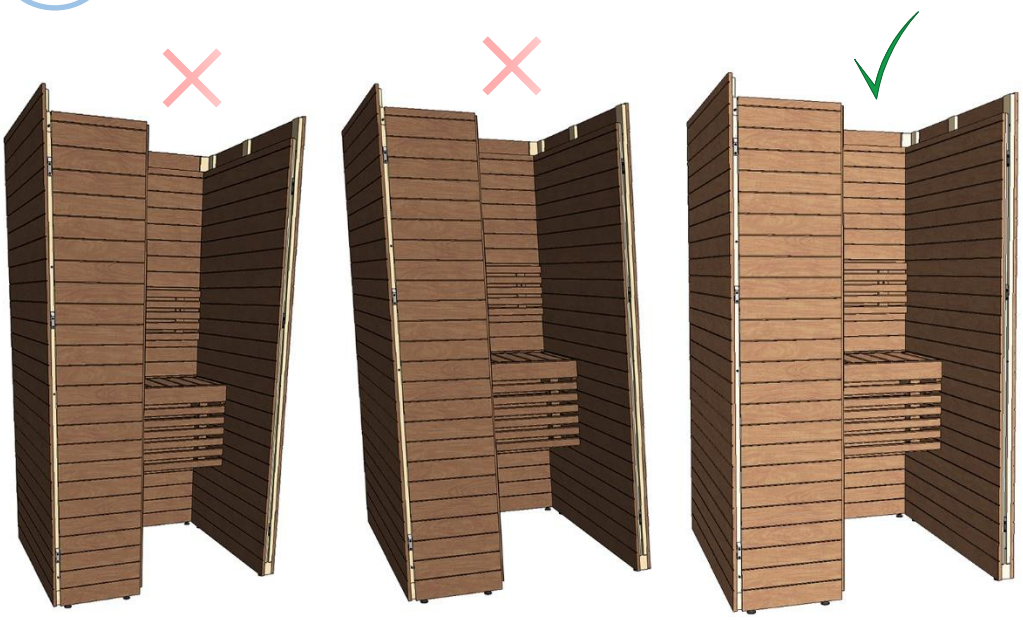

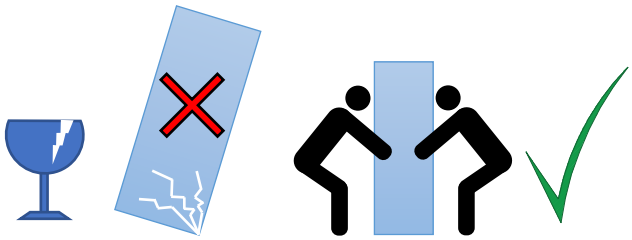

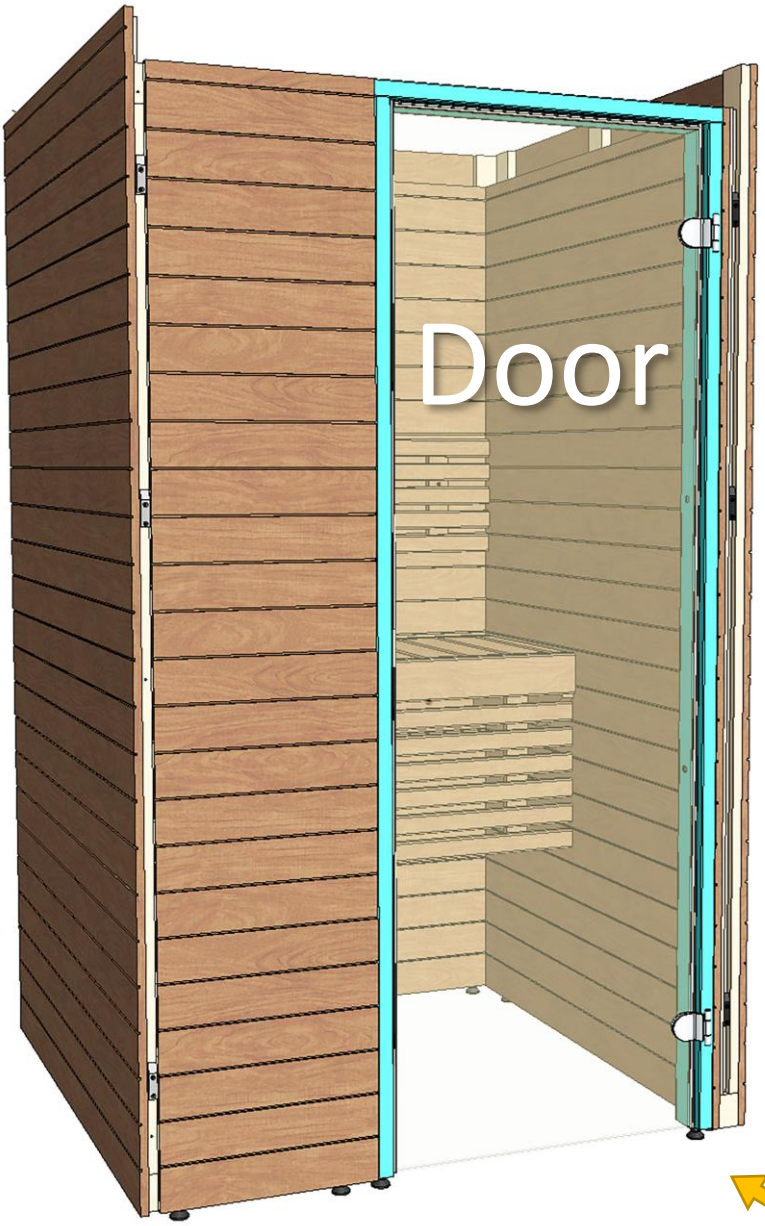
Door

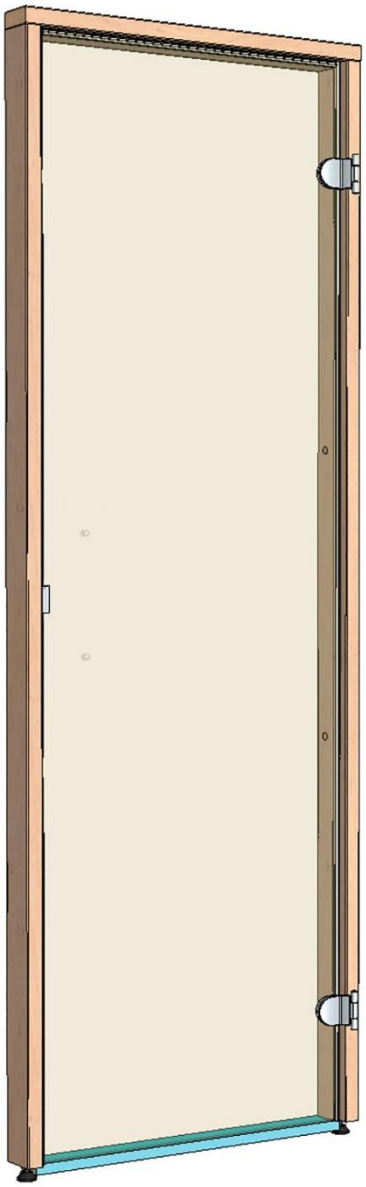

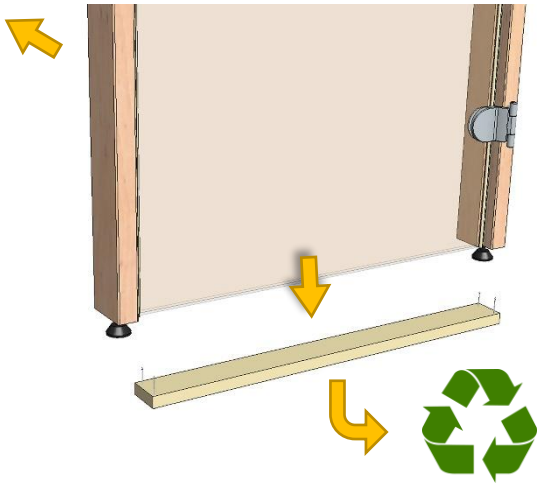

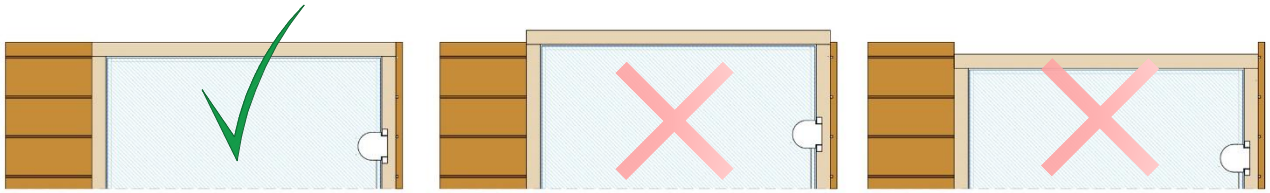

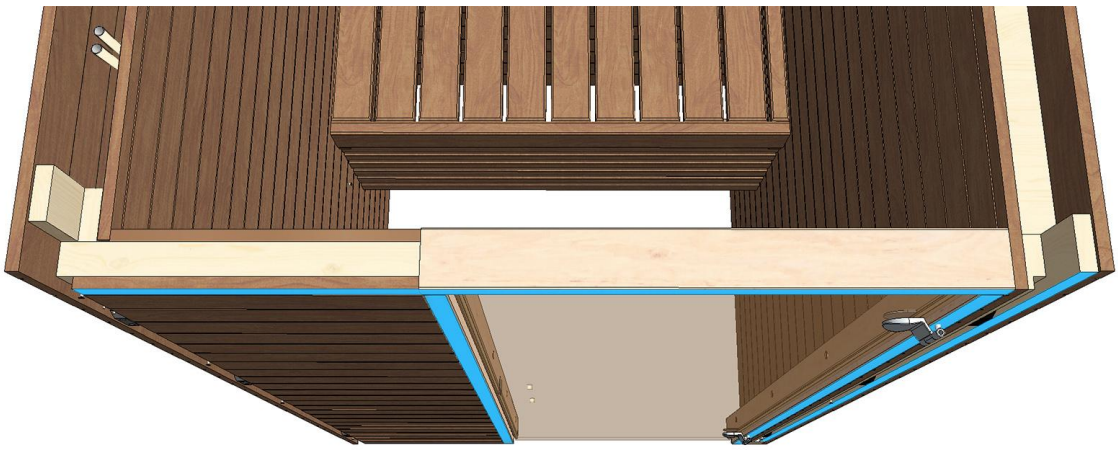

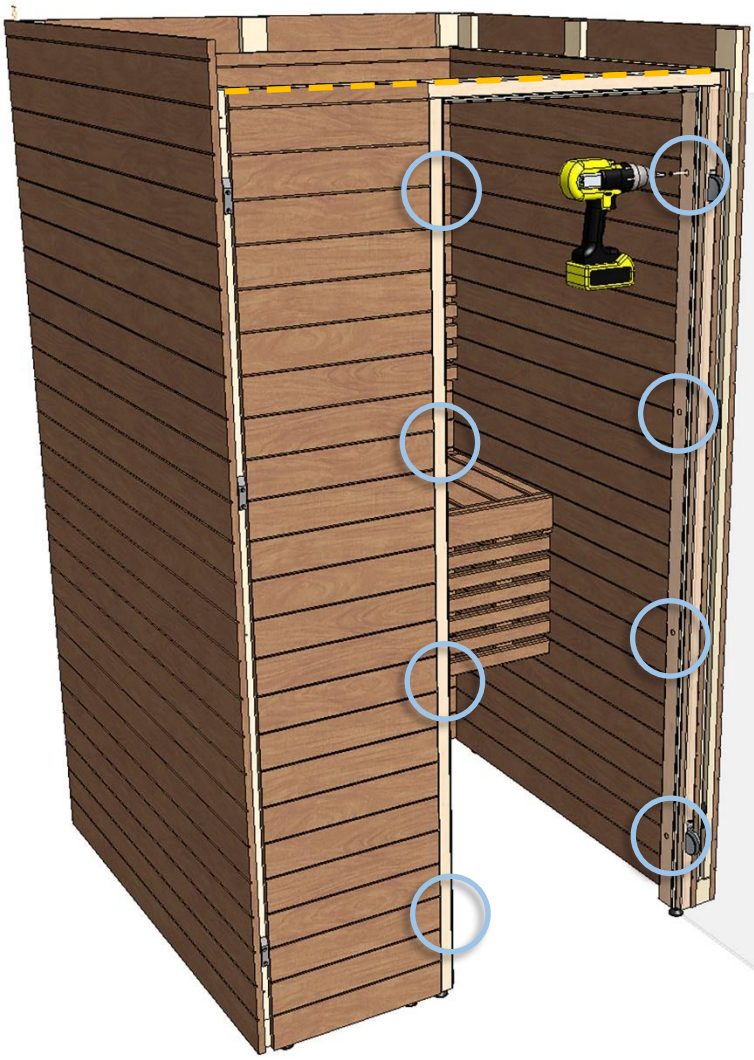

Zn 5 * 80 mm





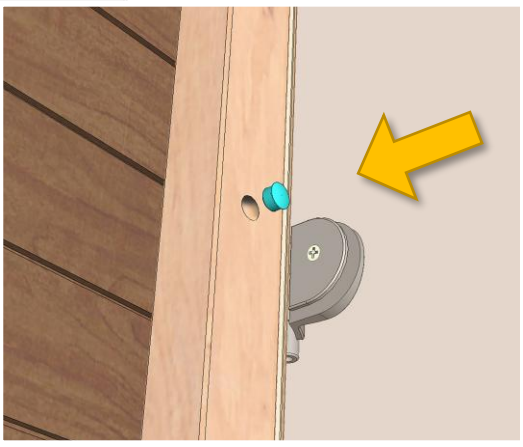



SAZ564

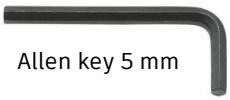

Allen key 5 mm

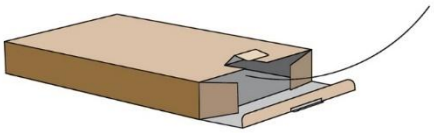



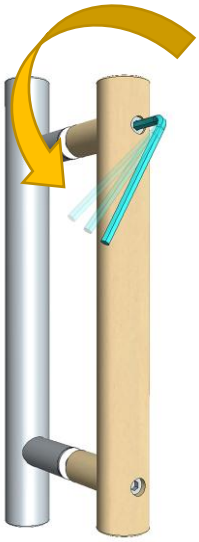

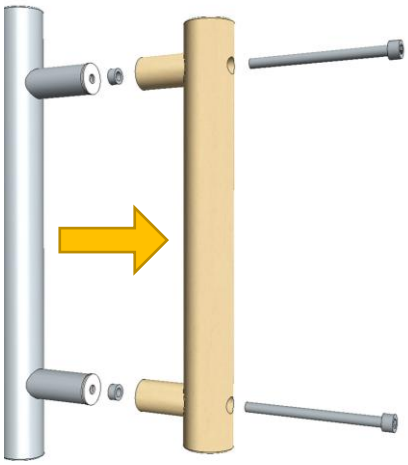

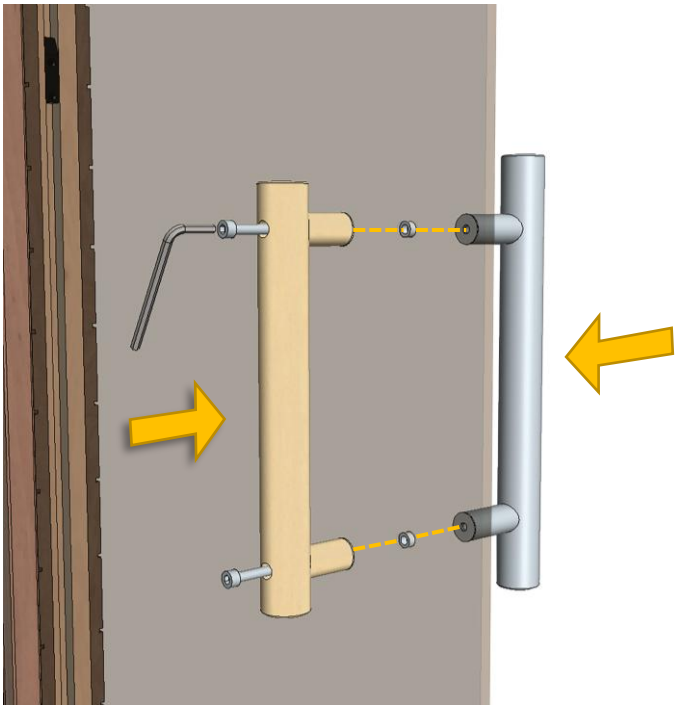

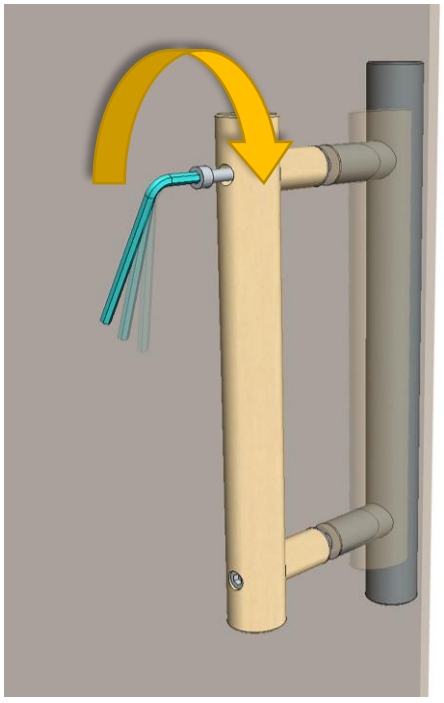

ZVEL-259C



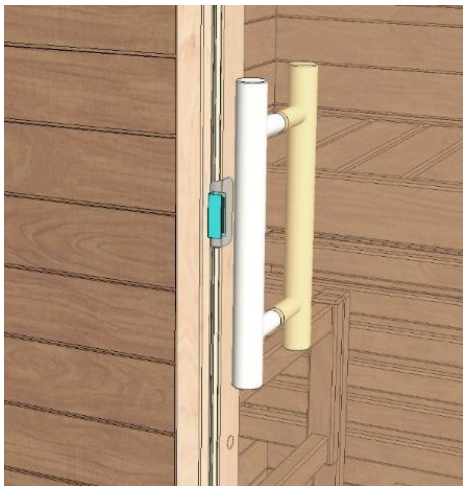

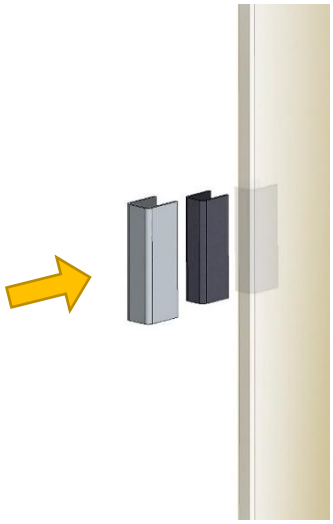



ZVEL-10

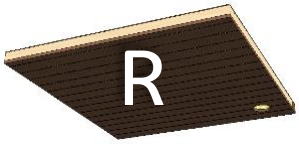

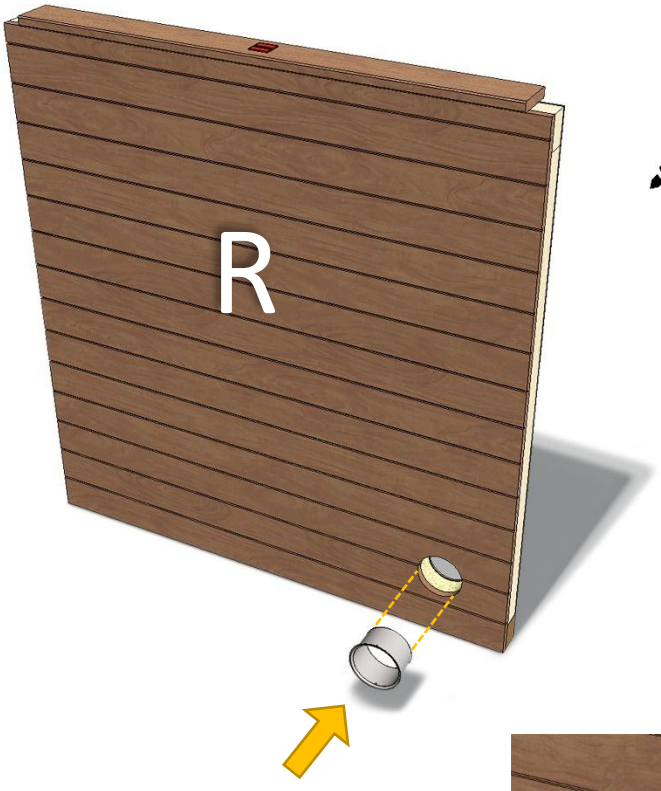



Ss 3 * 25 mm

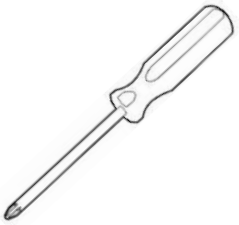

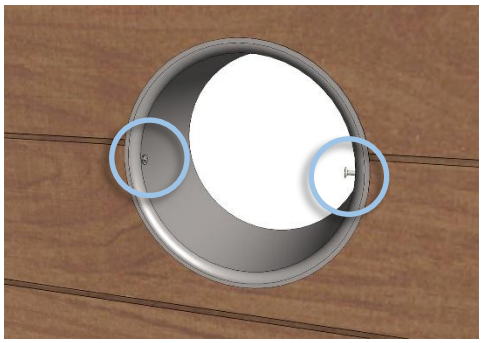

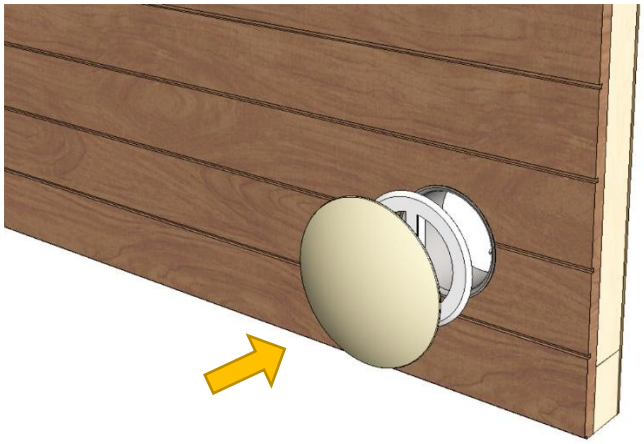

SZ093L






R


HARVIA

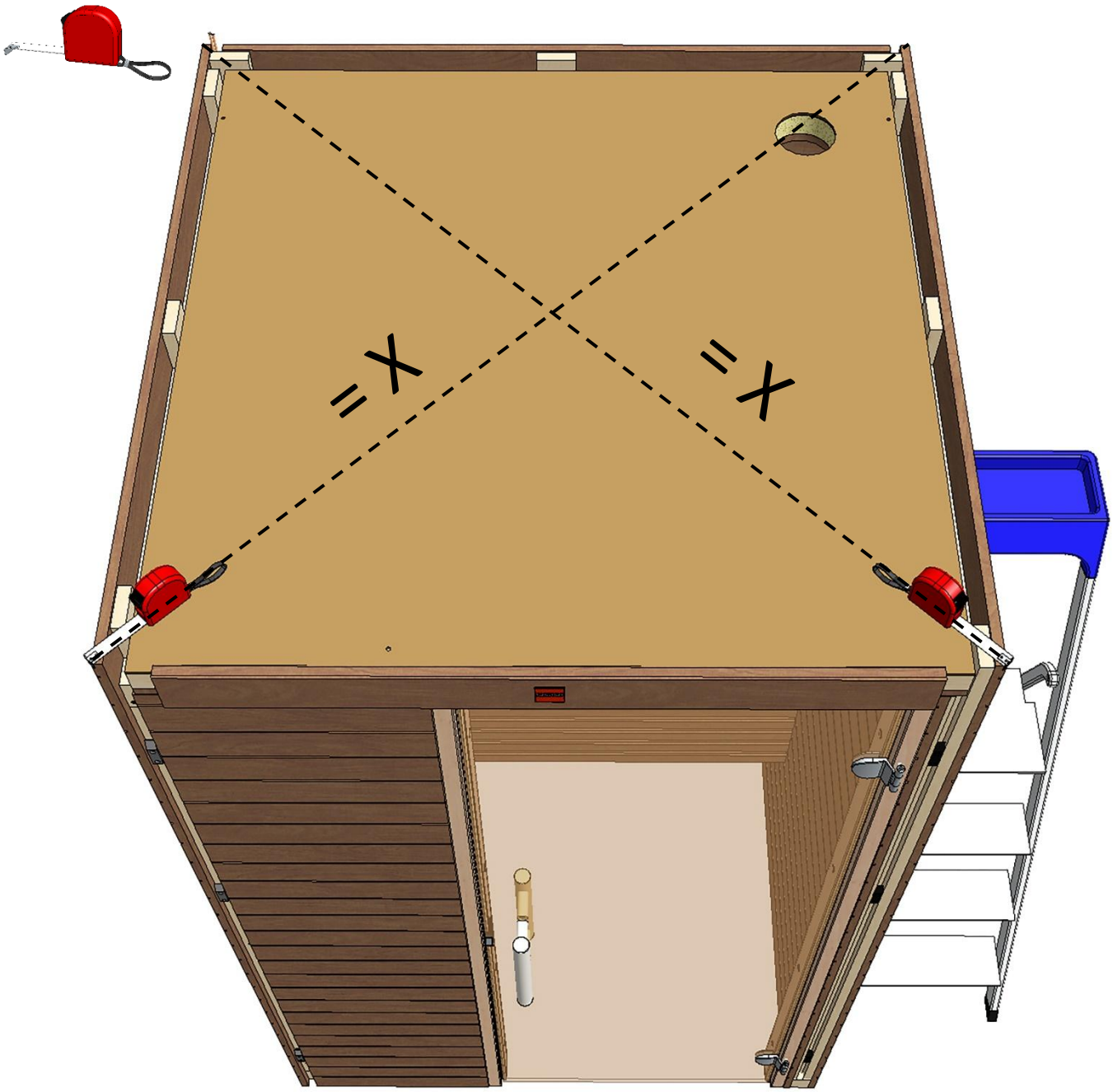
=X
=X

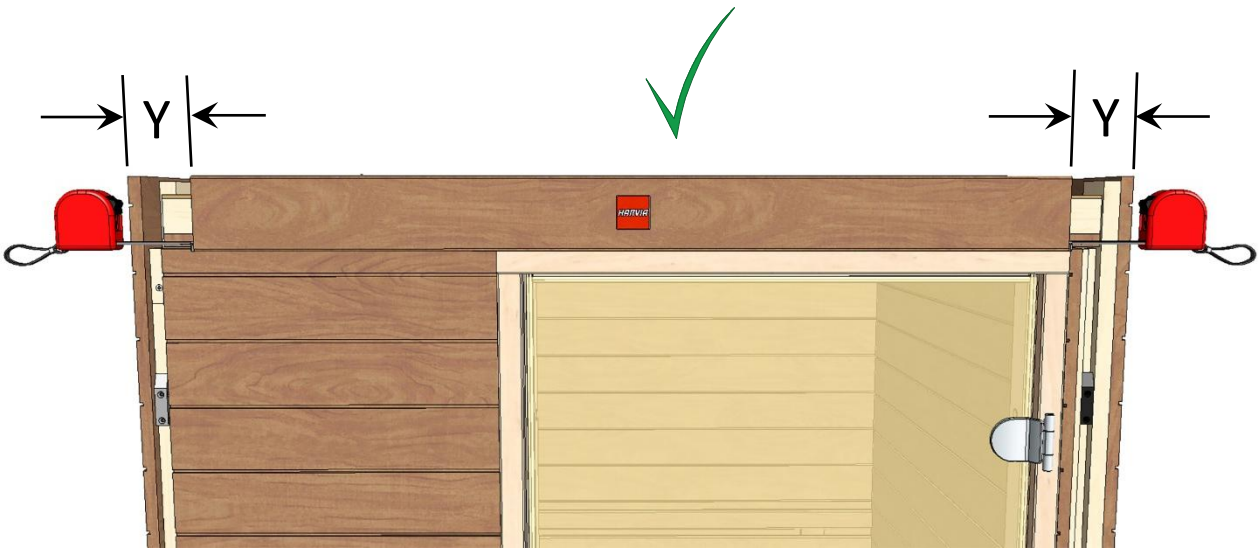
Y
Y

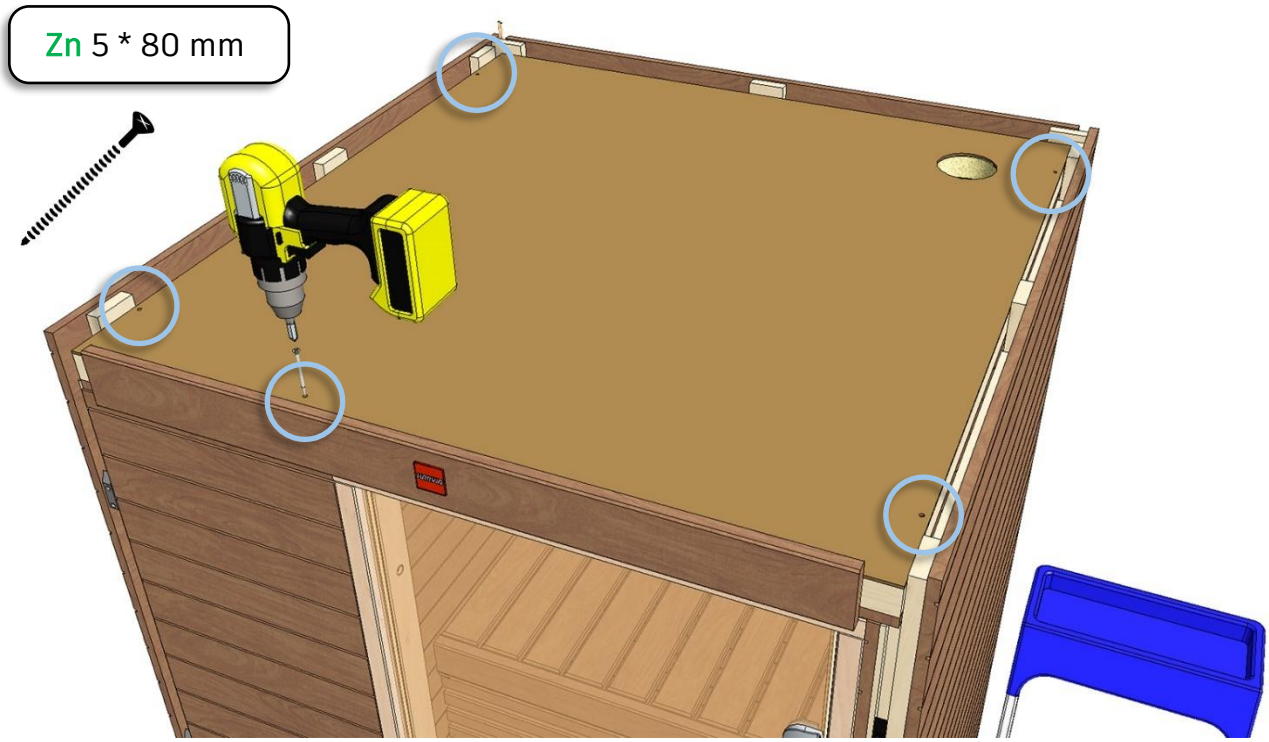

ZVEL-851





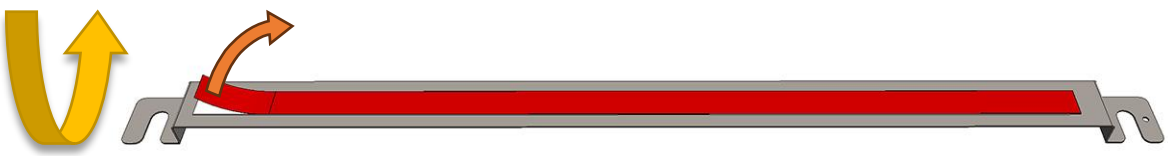

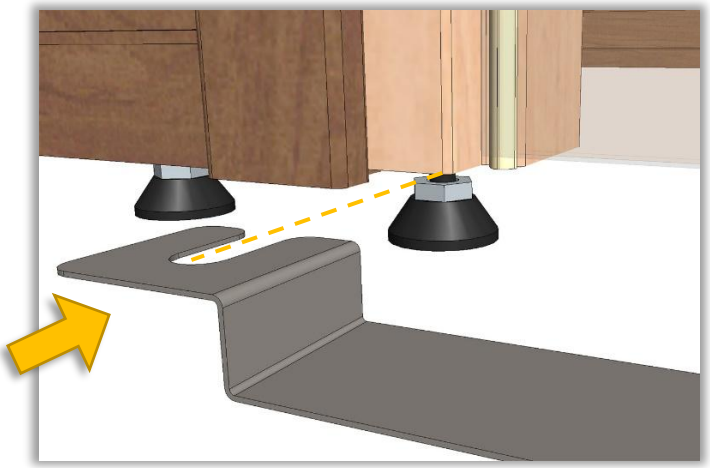

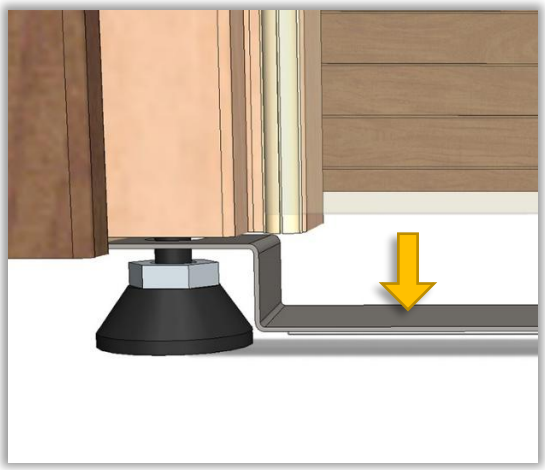

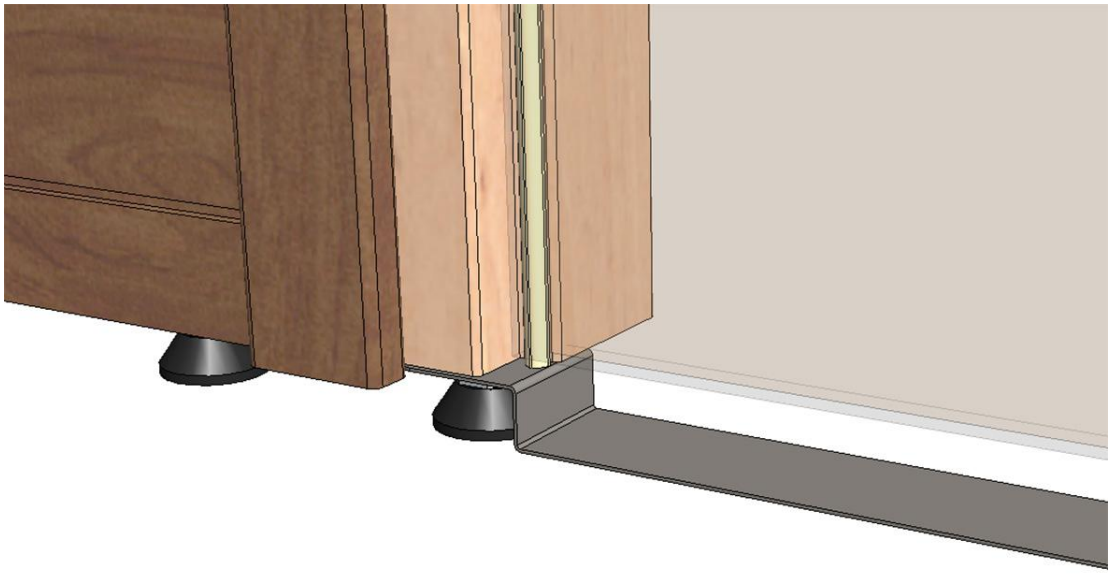





90 * 28 * 2034 mm



90 * 28 * 2034 mm

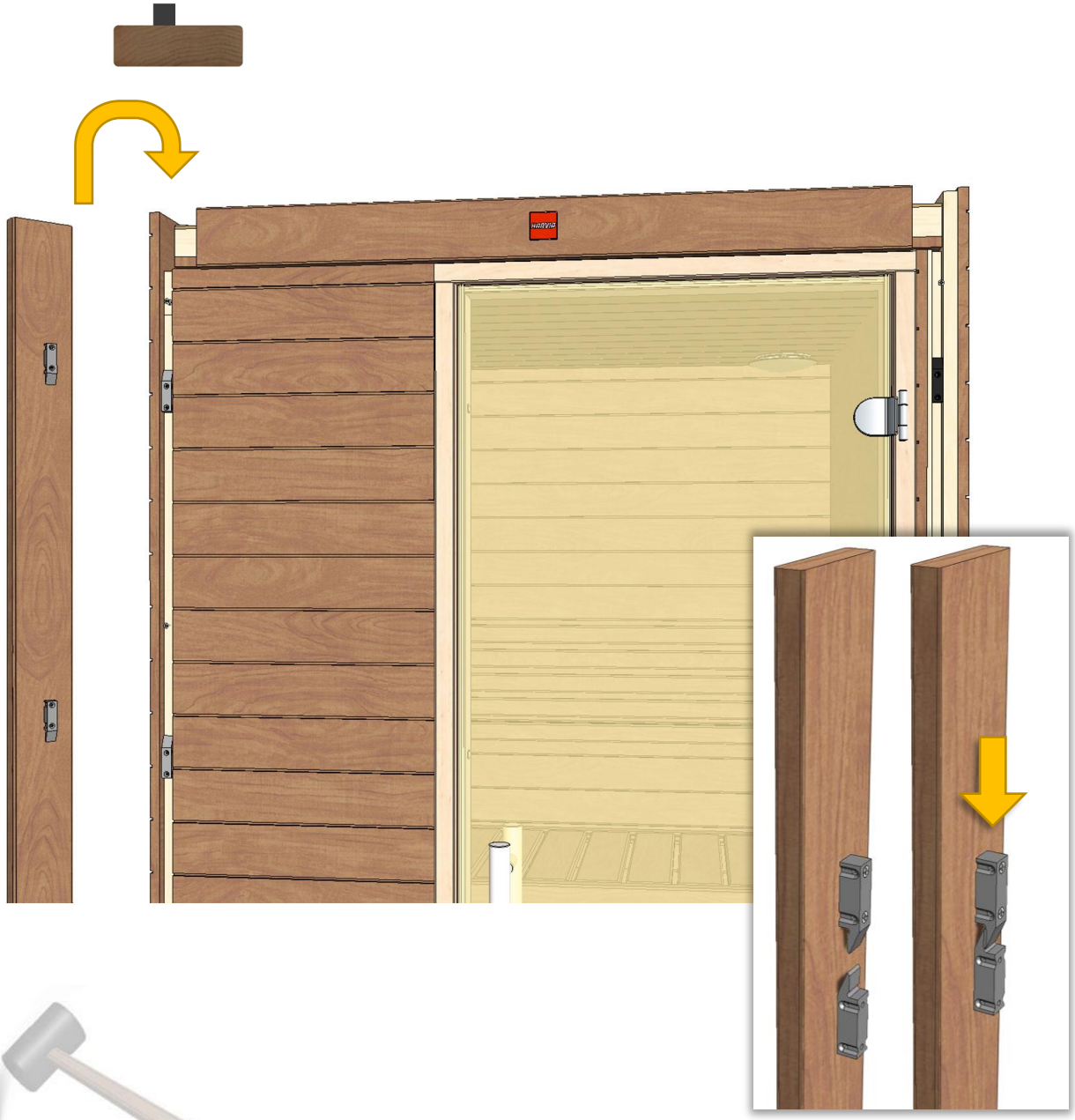

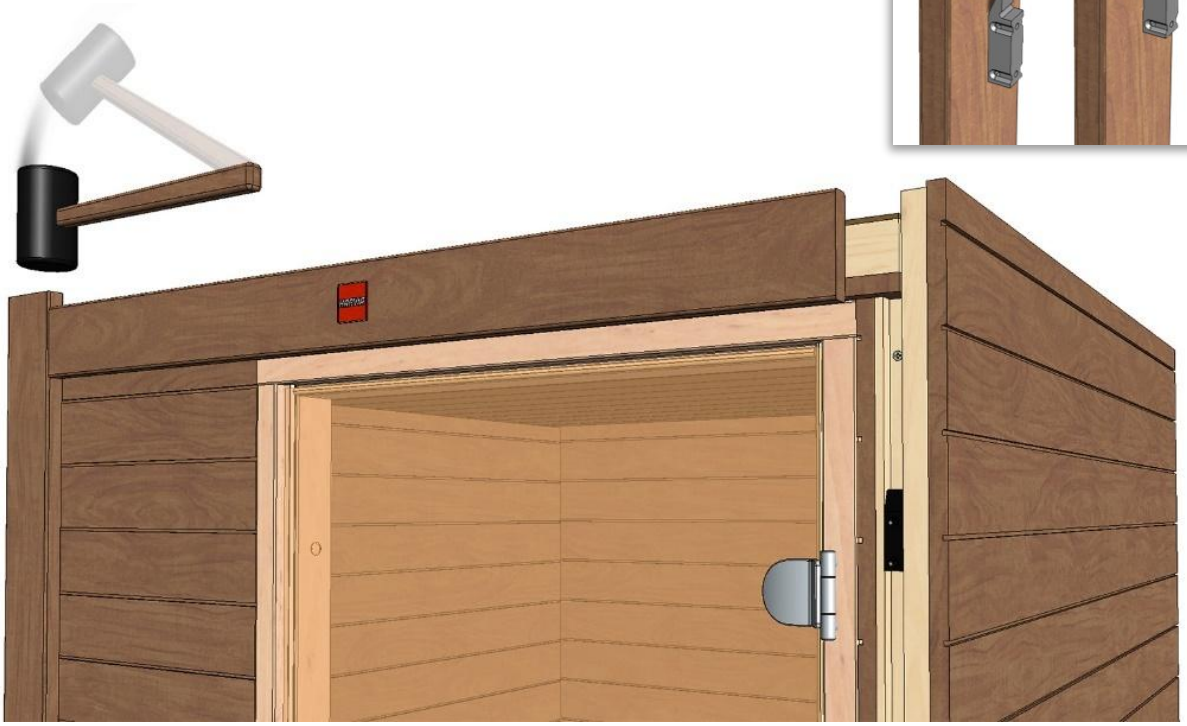



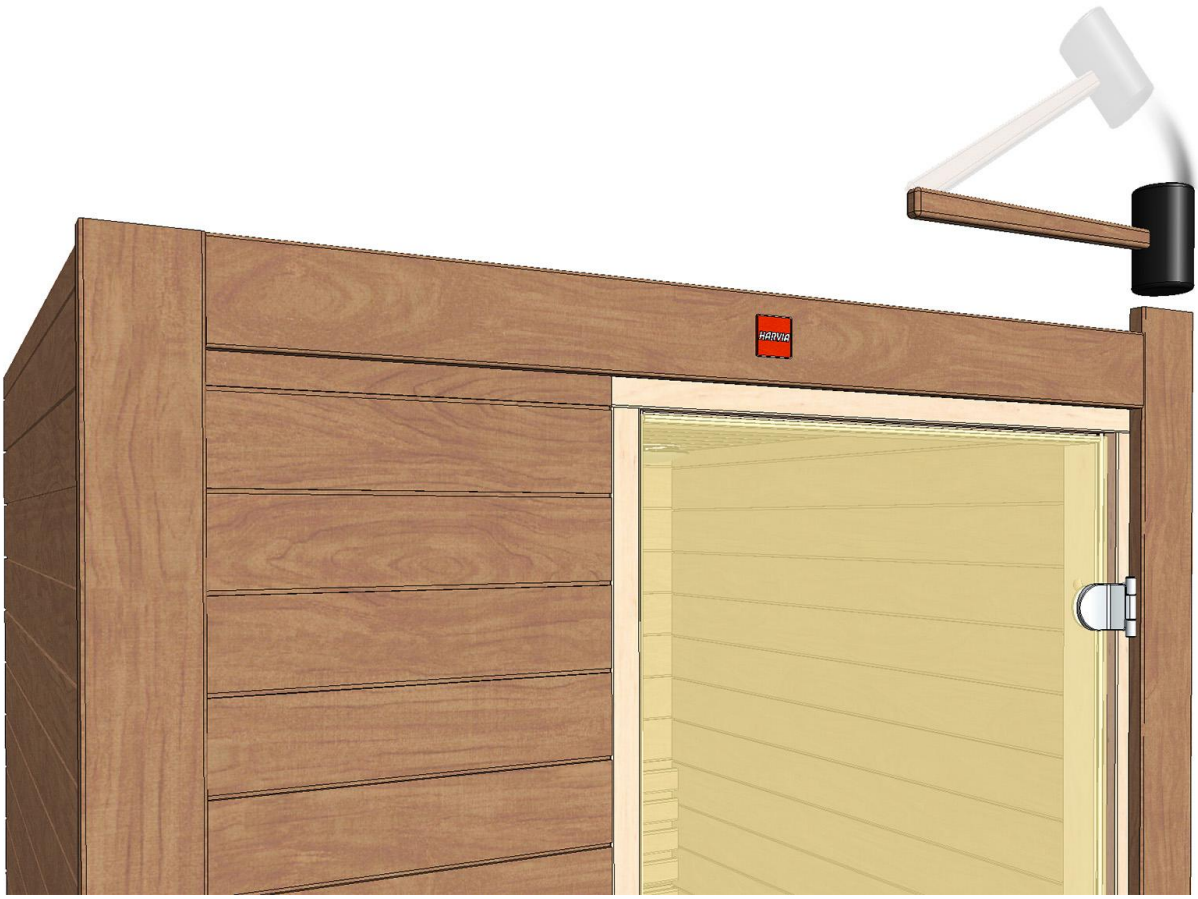

45 * 15 * 1953

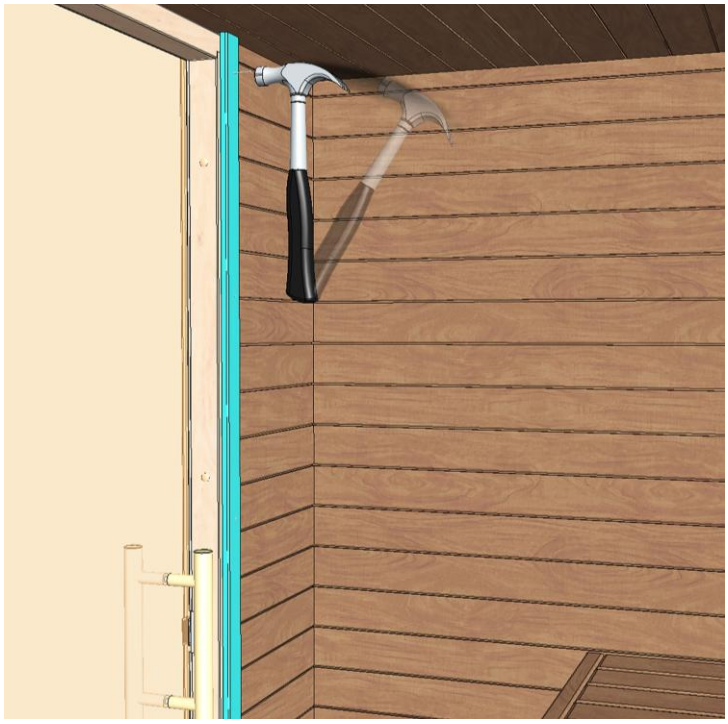



Zn 1,7 * 45 mm

21 * 52 * 2034

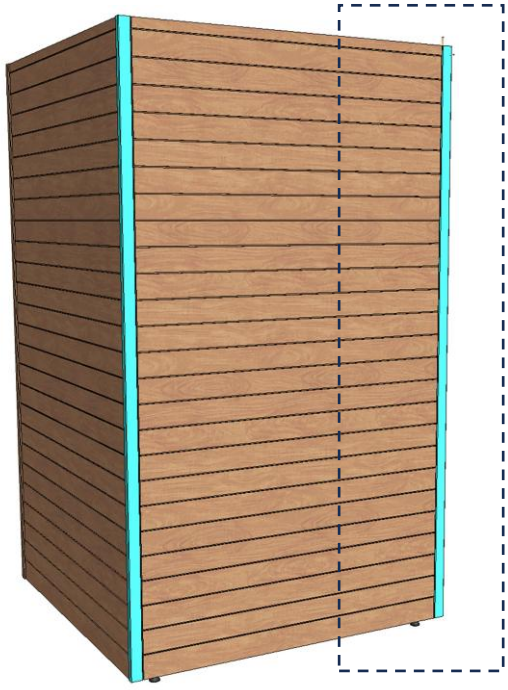

45 * 15 * 1953

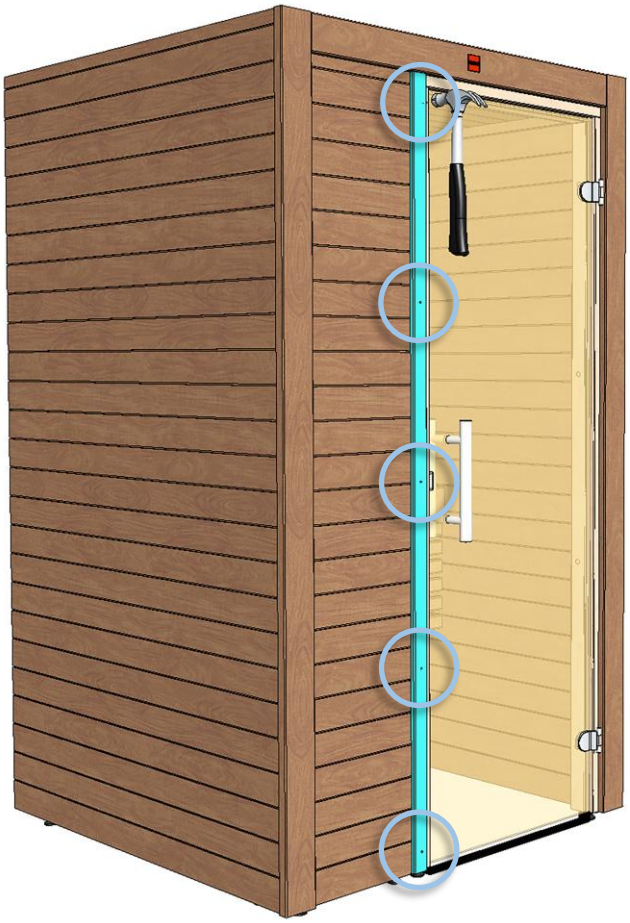

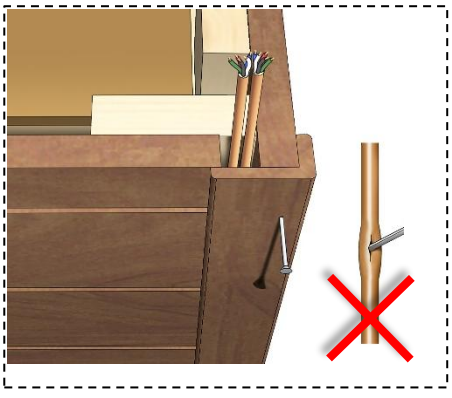

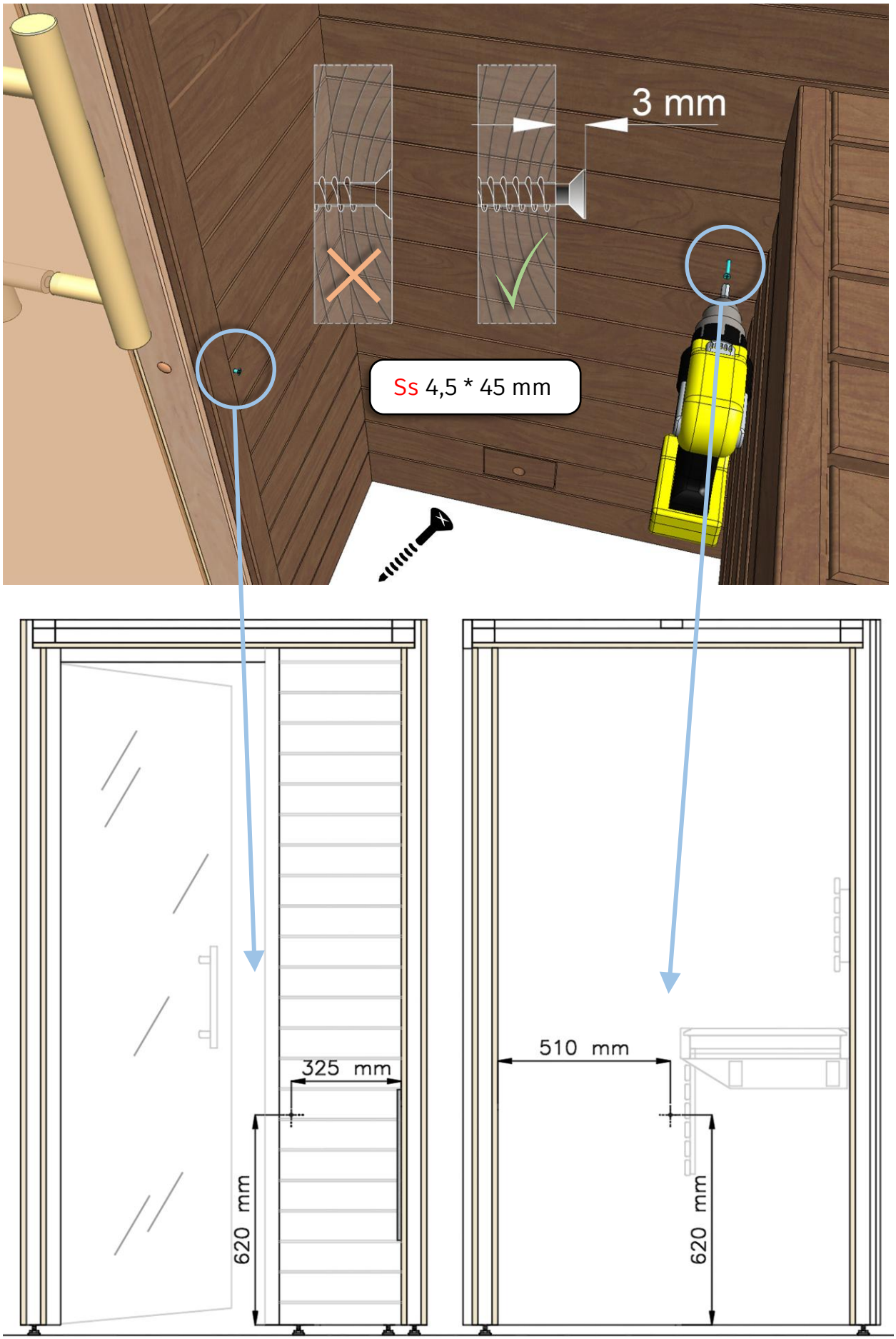
3 mm
Ss 4,5 * 45 mm
325 mm
620 mm
510 mm
620 mm

Notice! Heater is not included. Recommended heater for this sauna is Delta D36 3,6kW (HD272M02) **OR** Delta D36E 3,6kW (HDE364M) + Control unit Harvia Fenix FX110 WiFi Core IPX5 11 kW

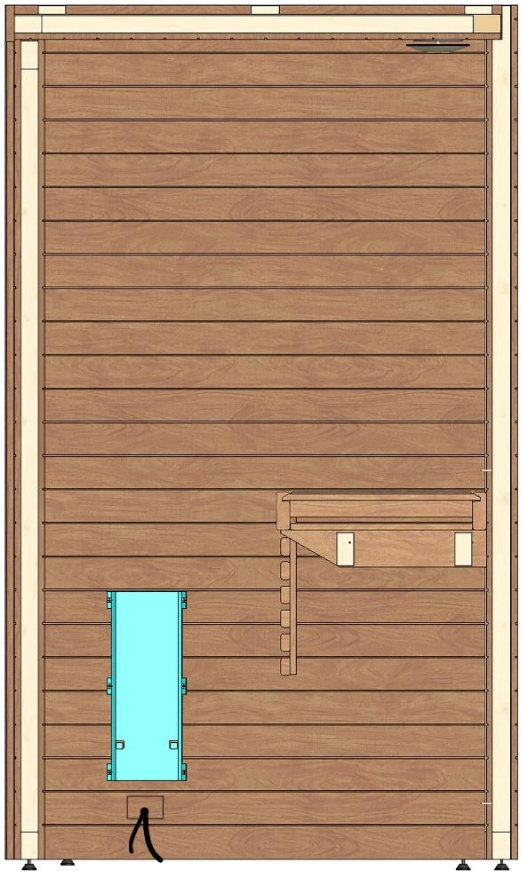

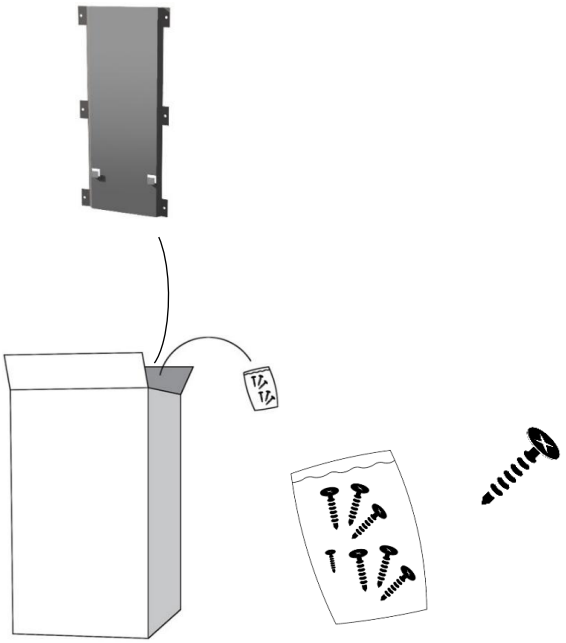

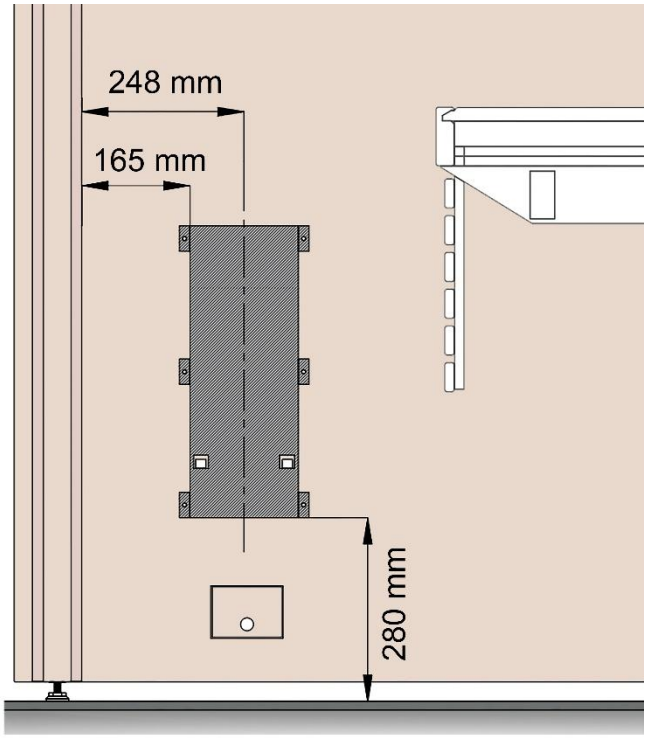

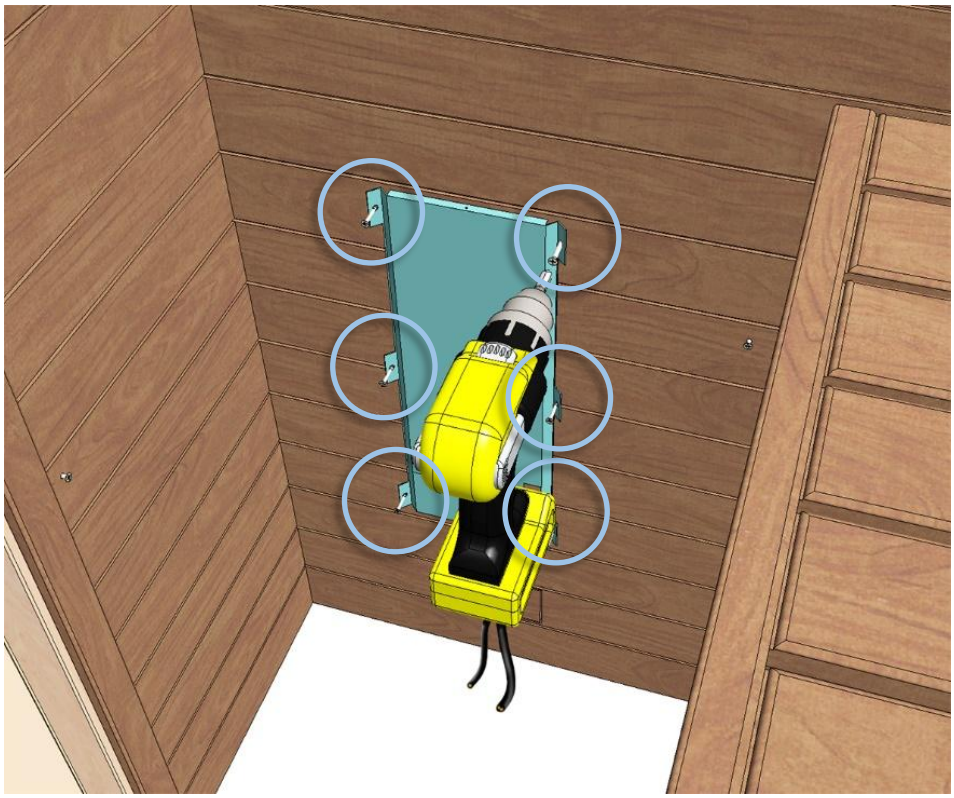



Notice.

Check right cables from the manual of the heater!

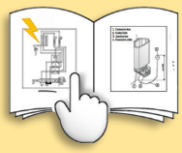





D36

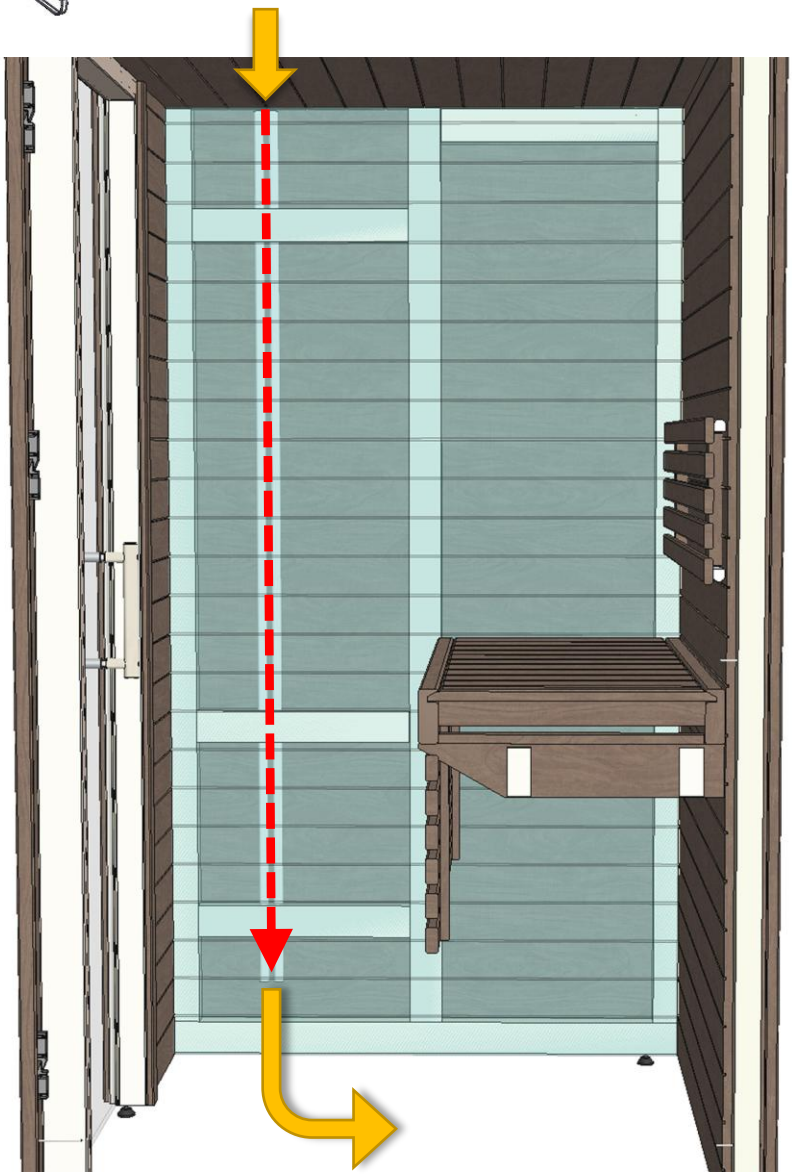



D36E P. 28

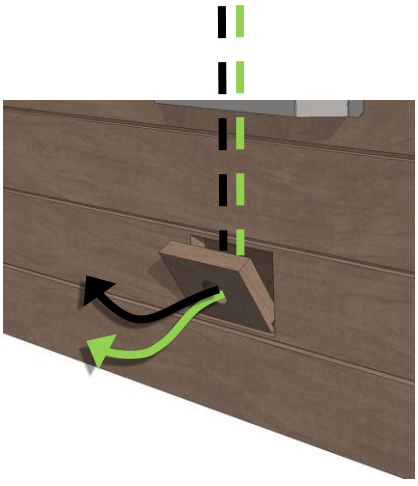

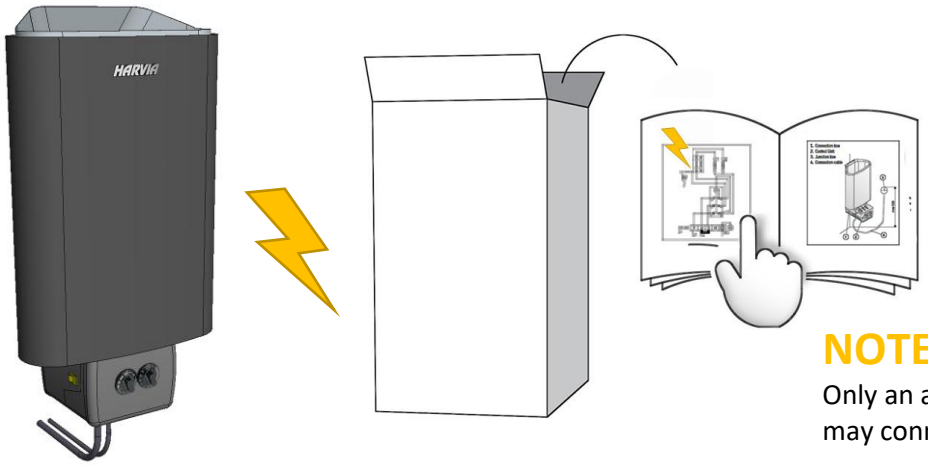

NOTE!

Only an authorized electrician may connect the sauna heater!

D36E



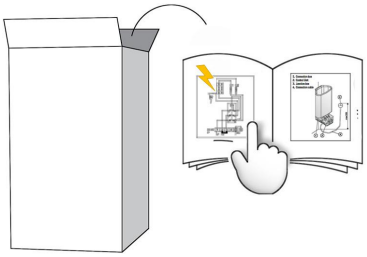

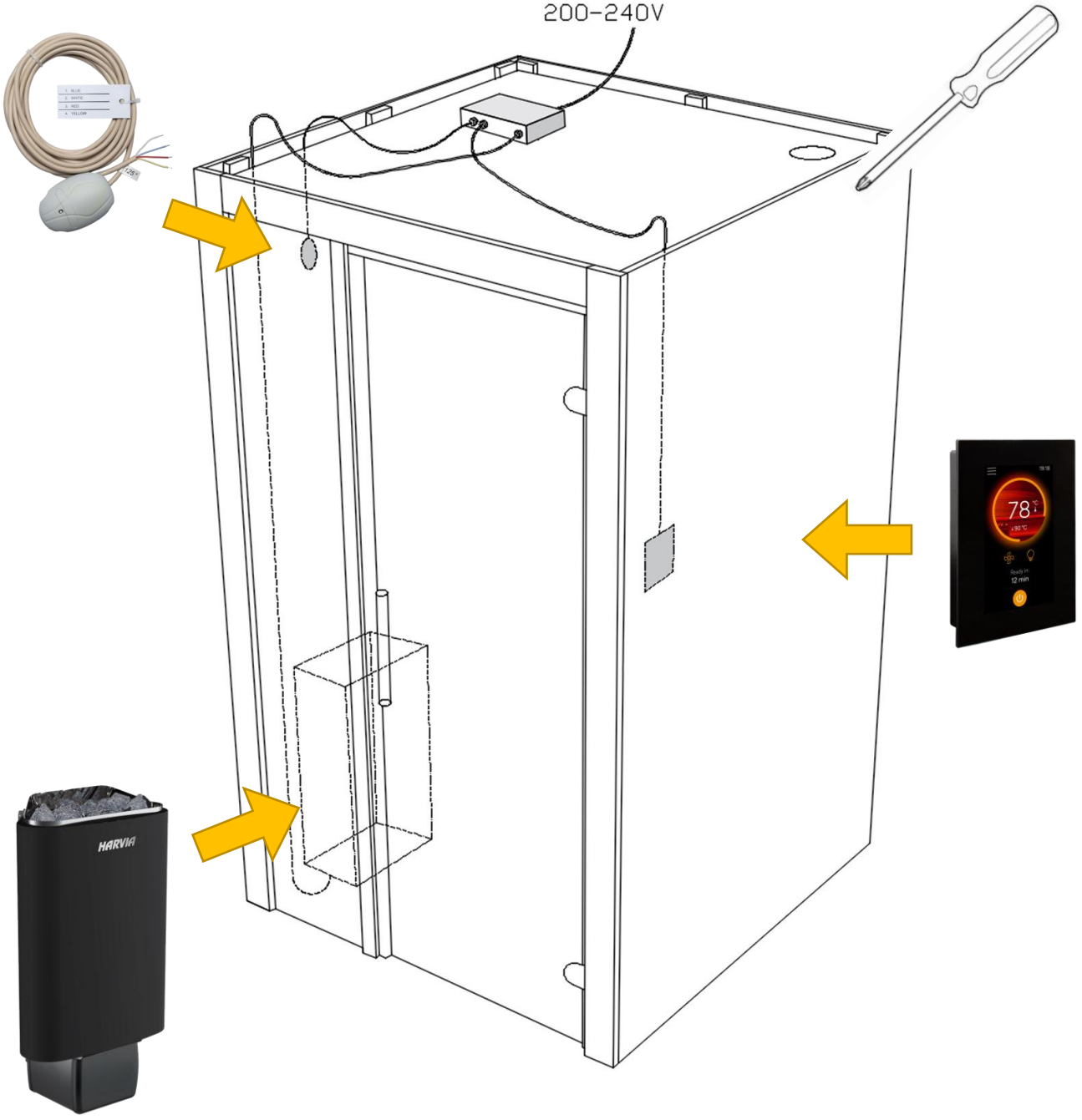



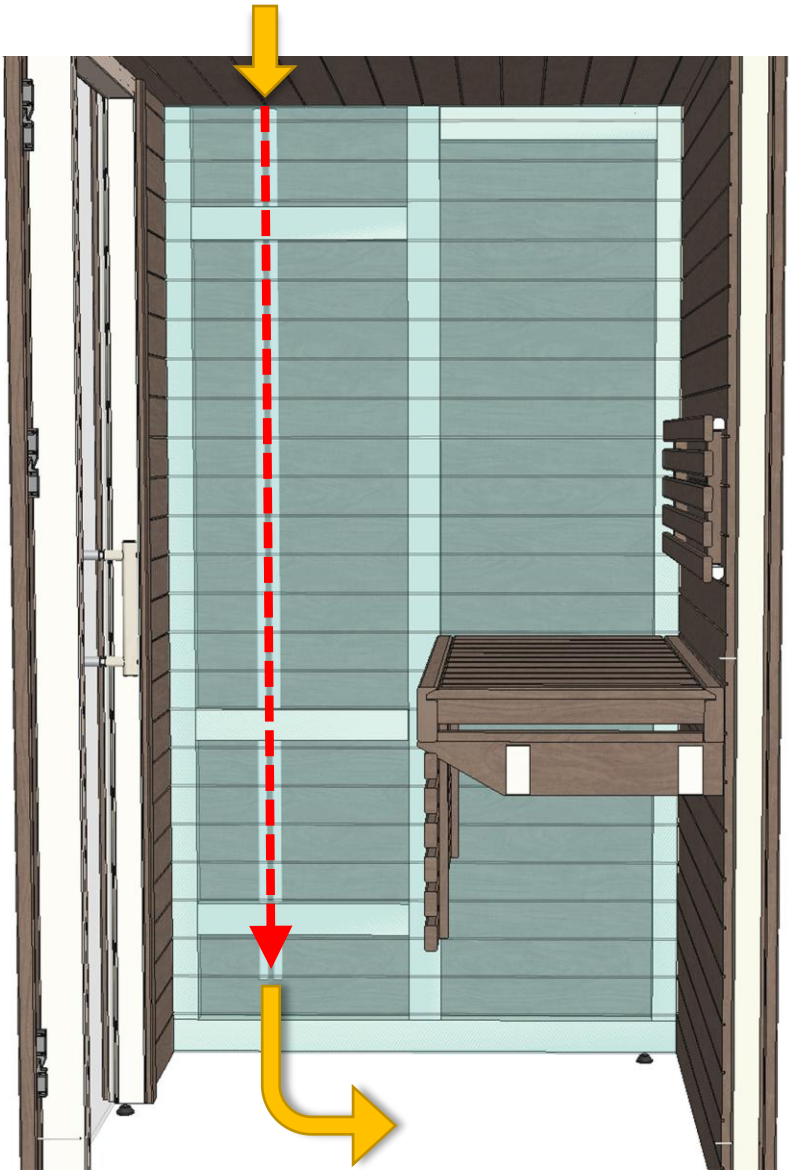

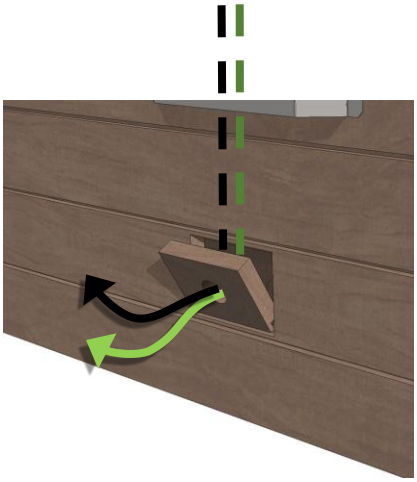



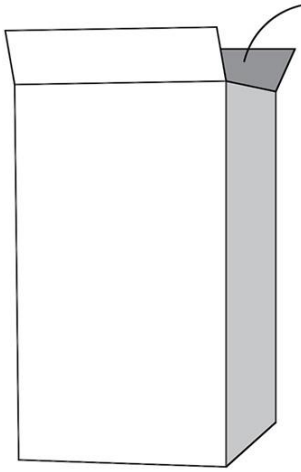

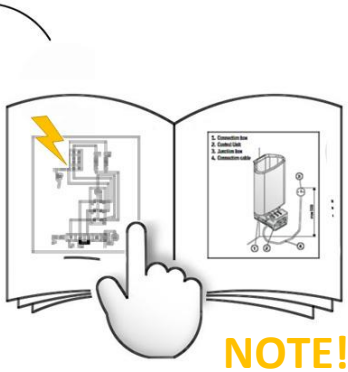

NOTE!

Only an authorized electrician may connect the sauna heater!







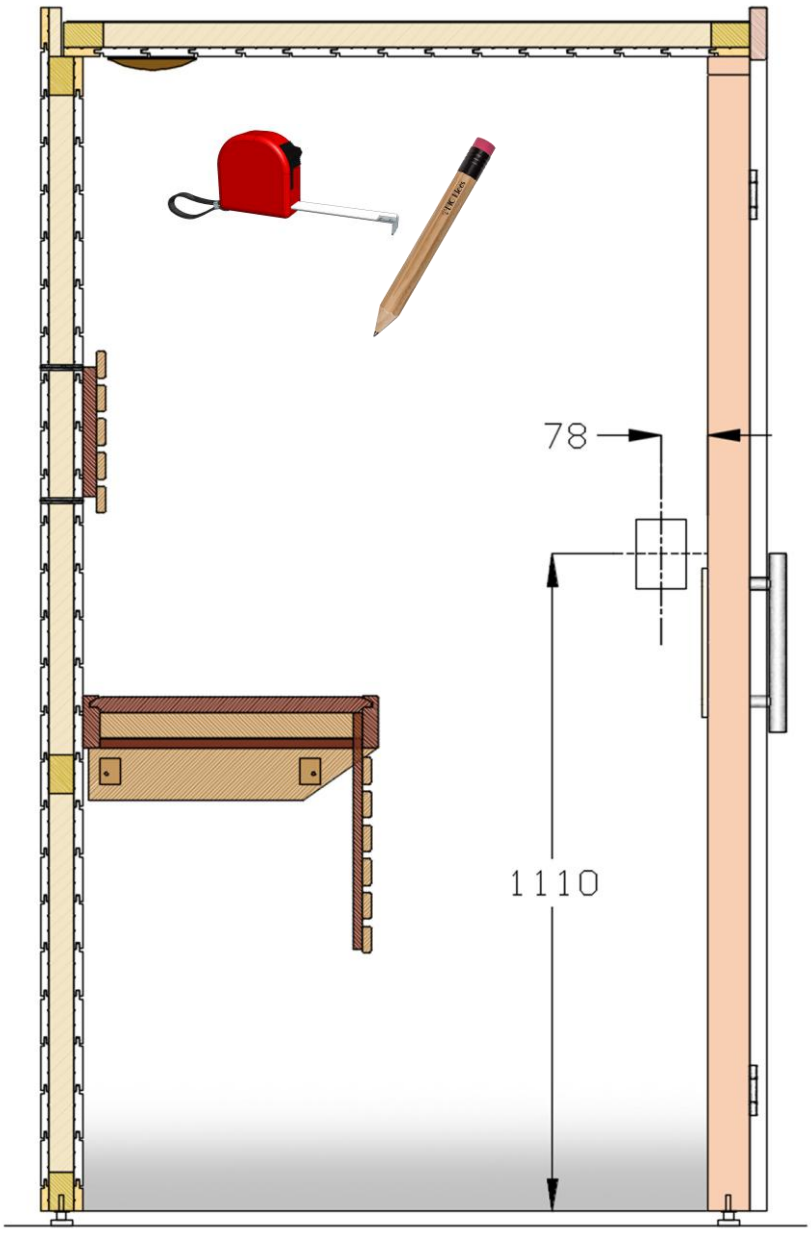
78
1110

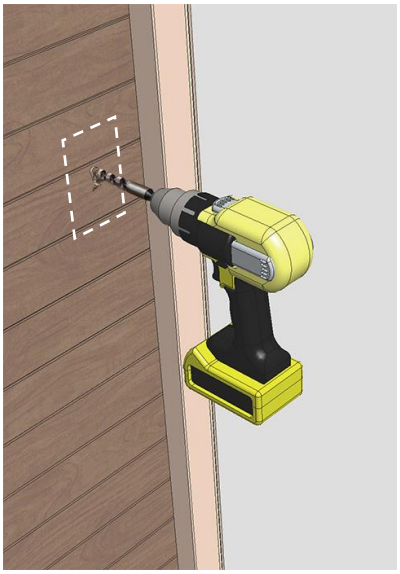



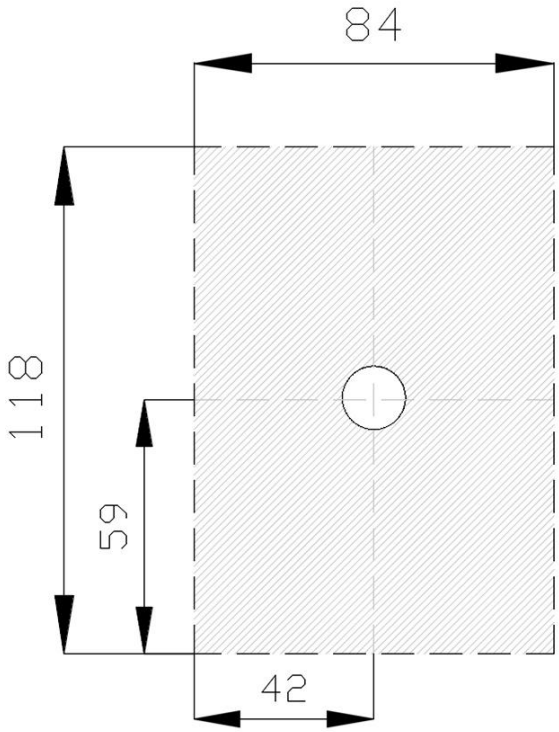
84
118
59
42

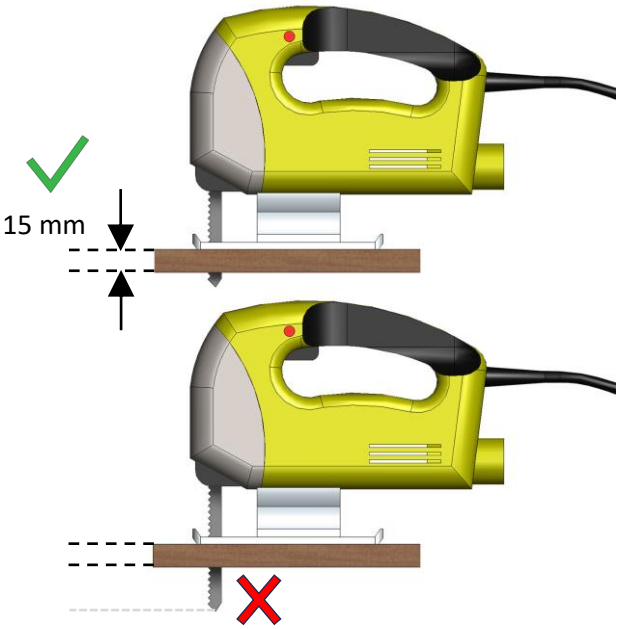
15 mm

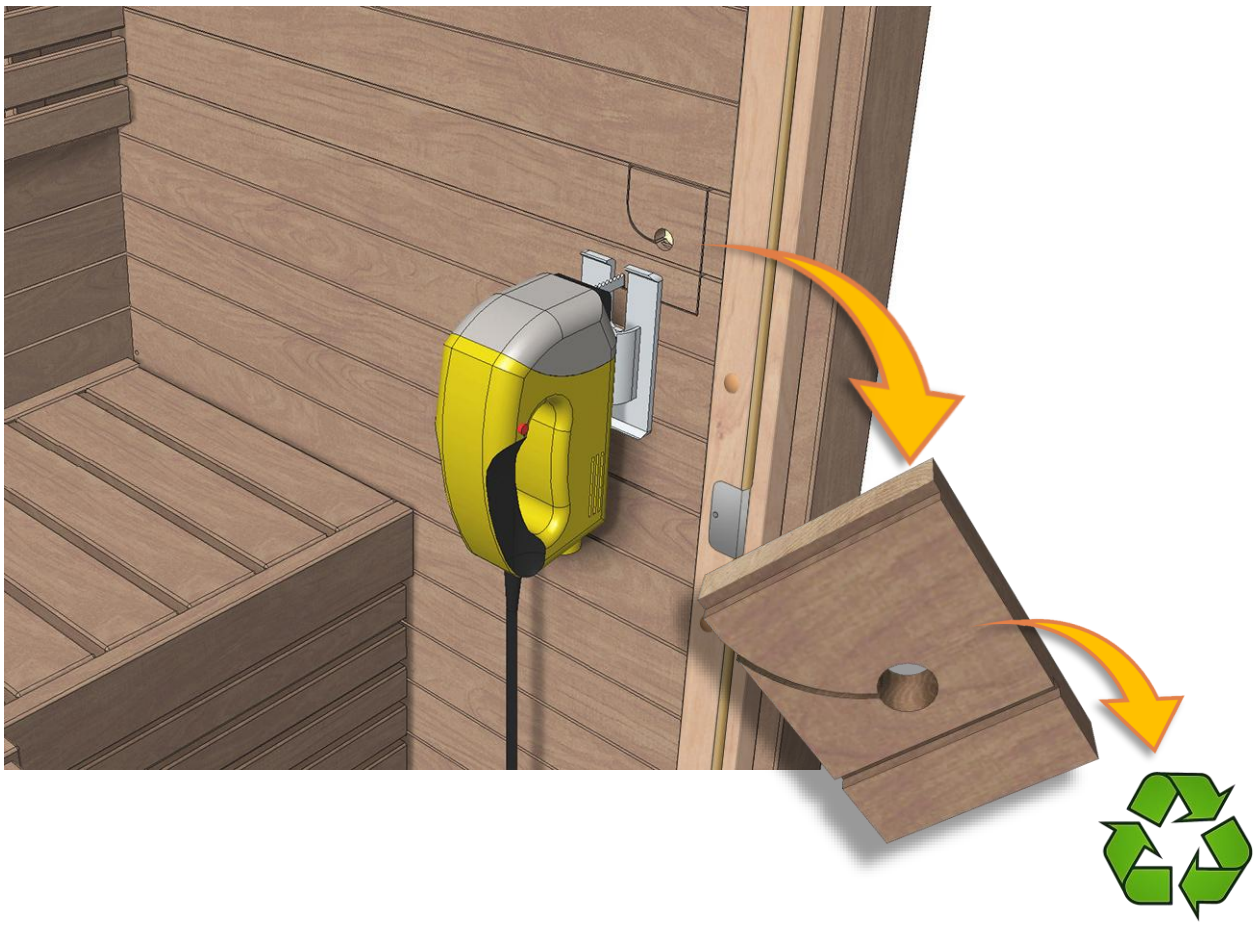





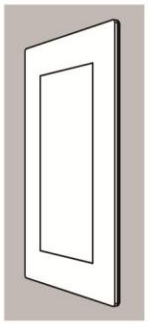

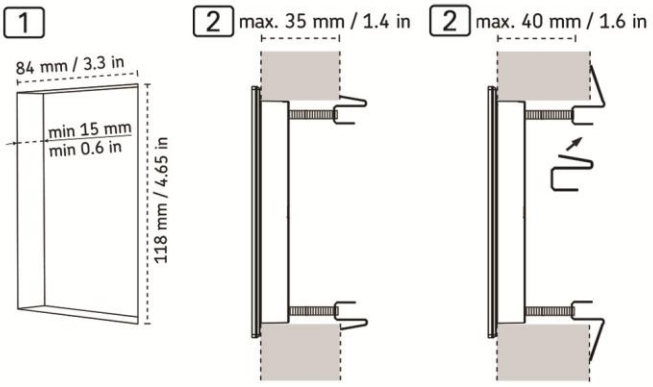
1
84 mm / 3.3 in
min 15 mm
min 0.6 in
118 mm / 4.65 in
2
max. 35 mm / 1.4 in
2
max. 40 mm / 1.6 in

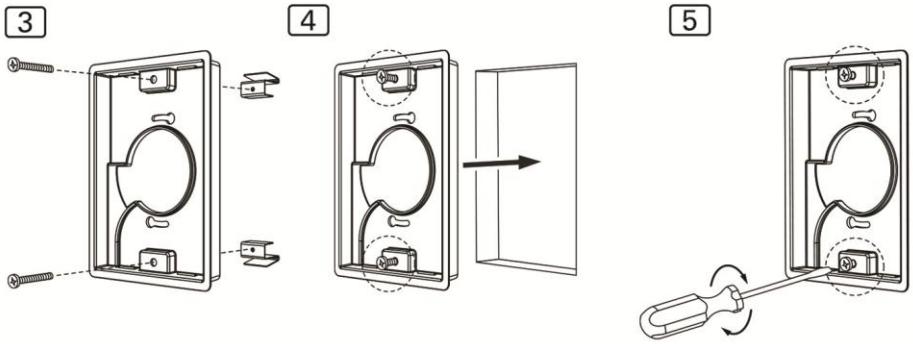
3
4
5

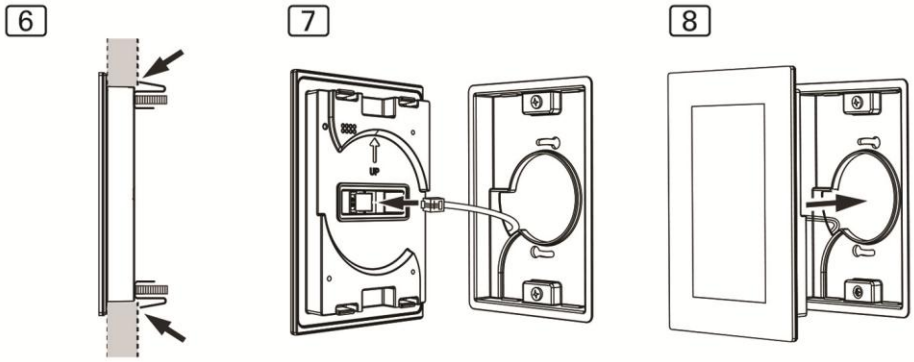
6
7
8



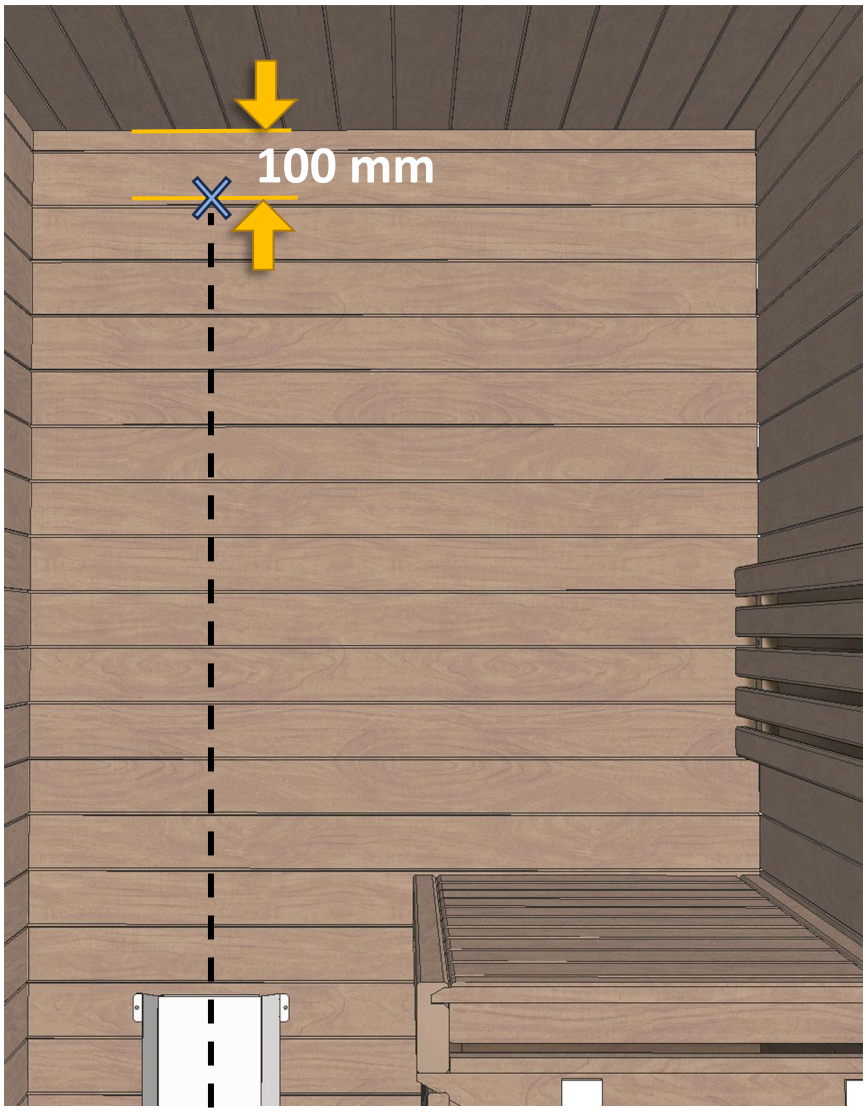

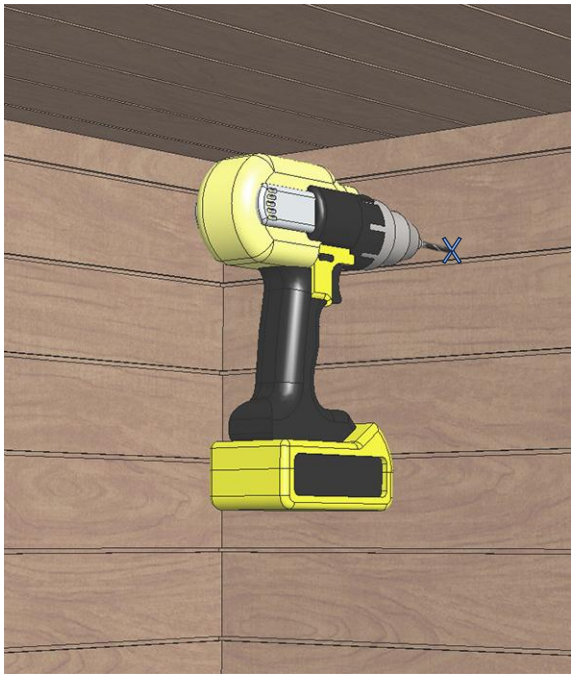

ø 8 mm

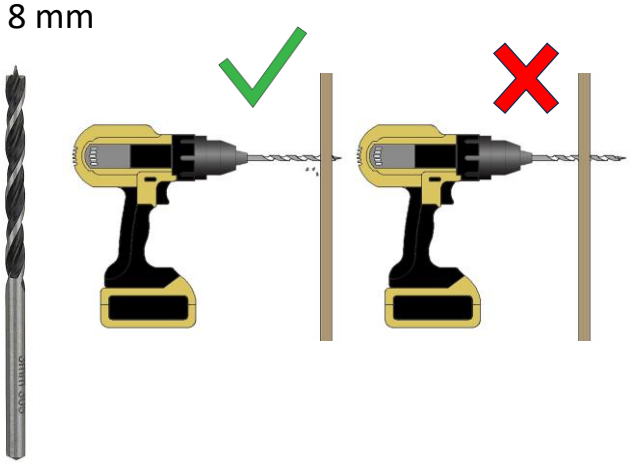

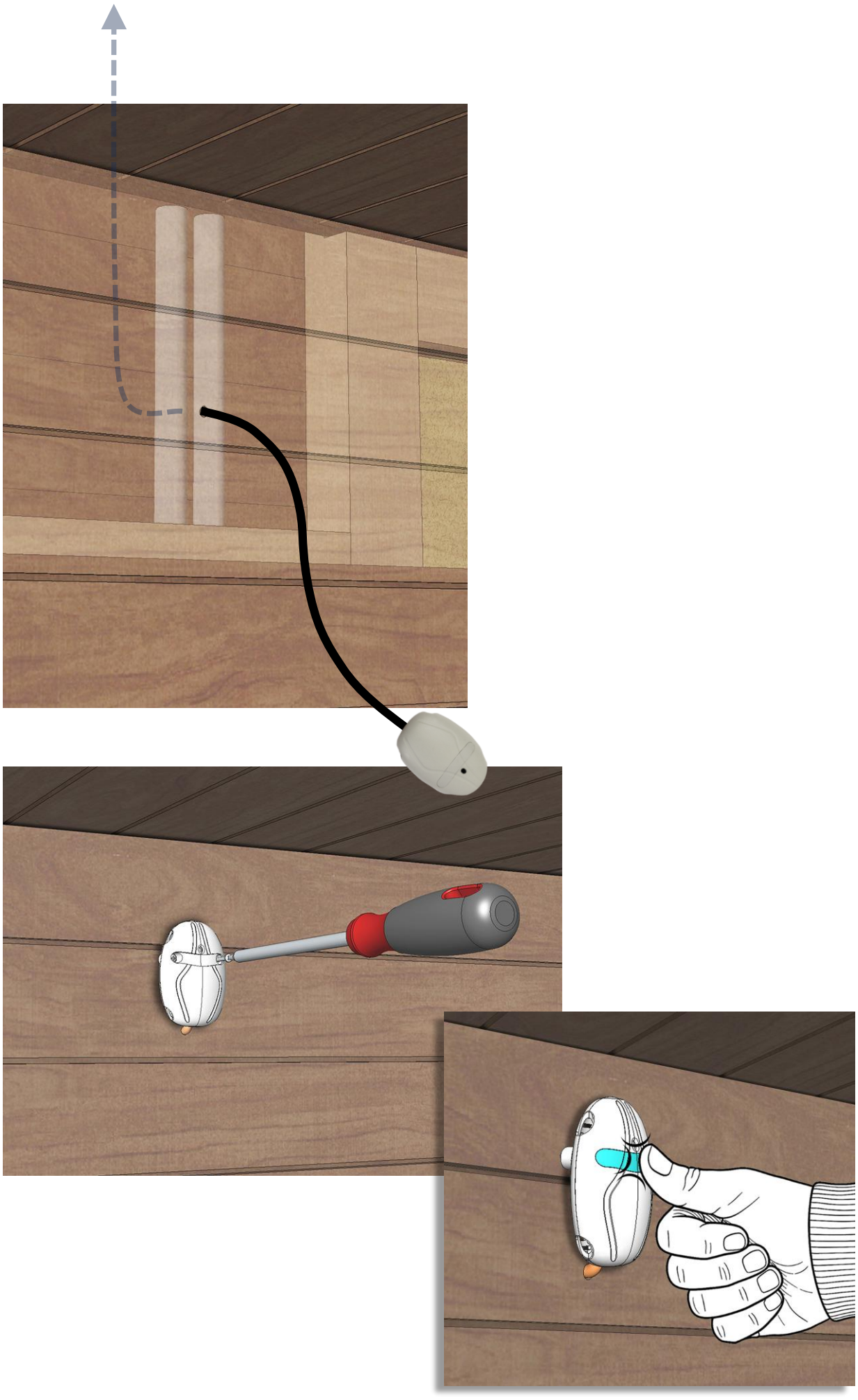

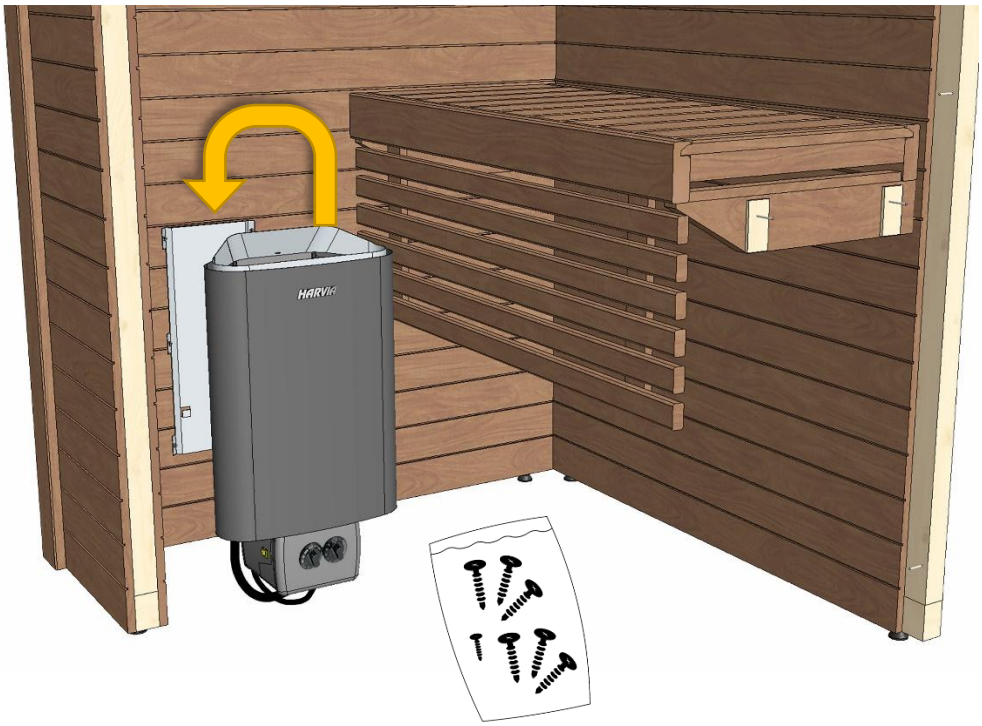

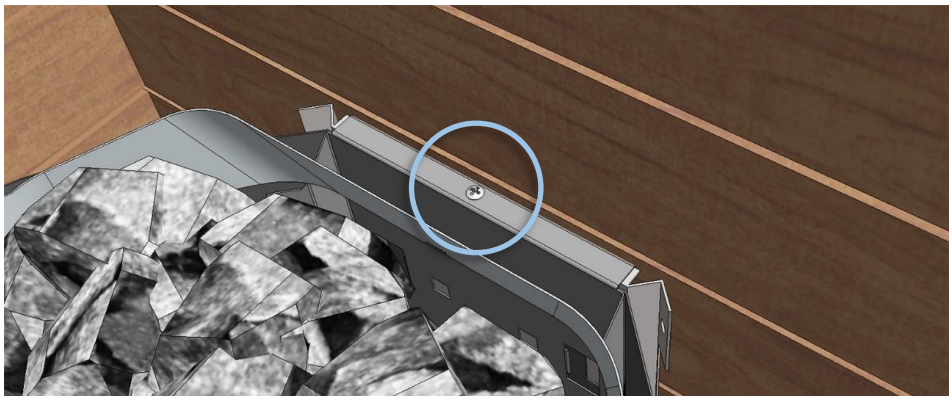

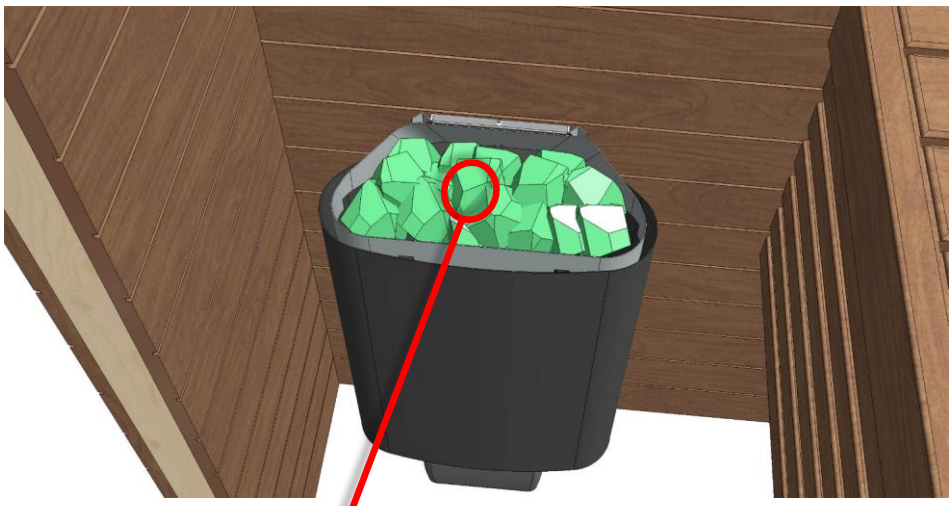

AC3000







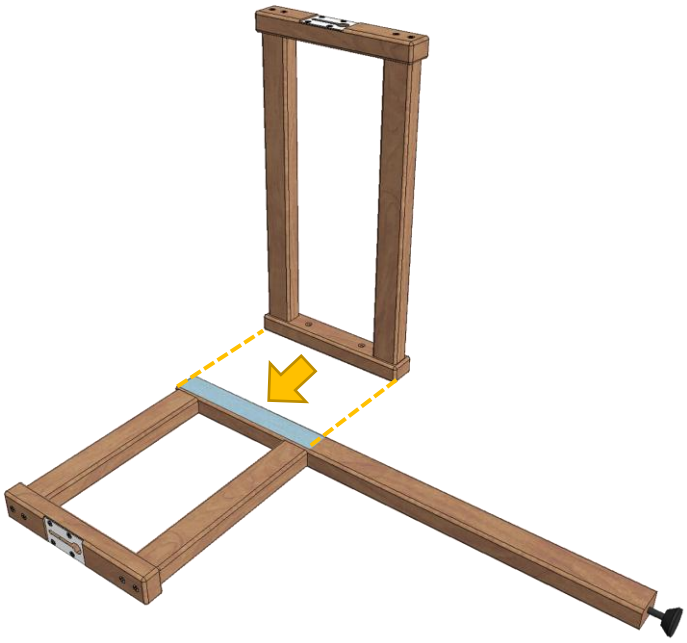

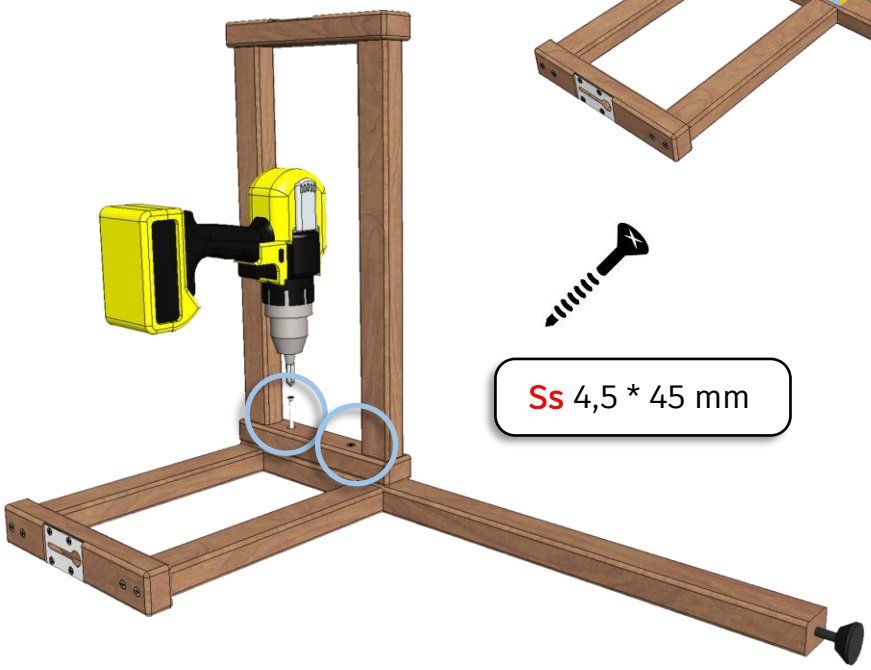

Ss 4,5 * 45 mm

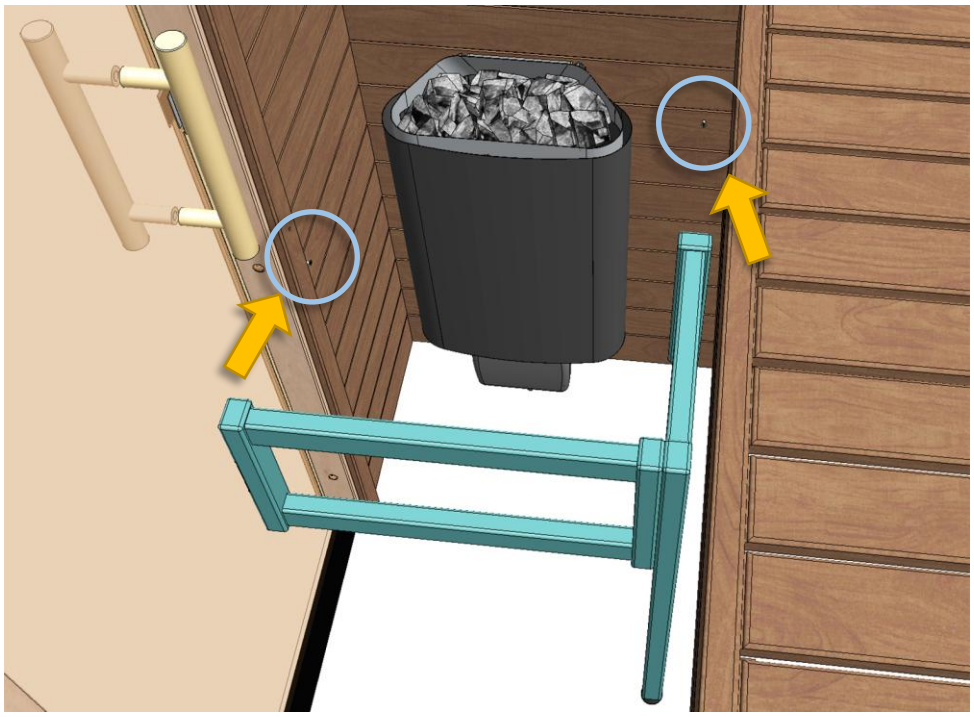

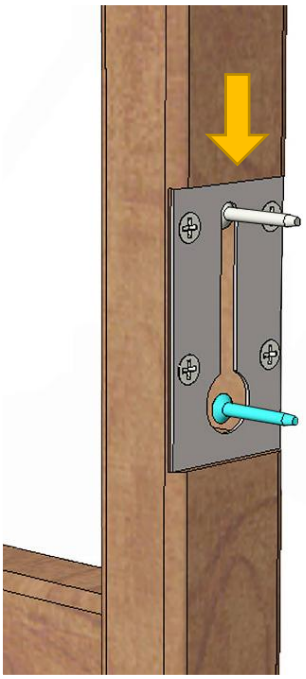





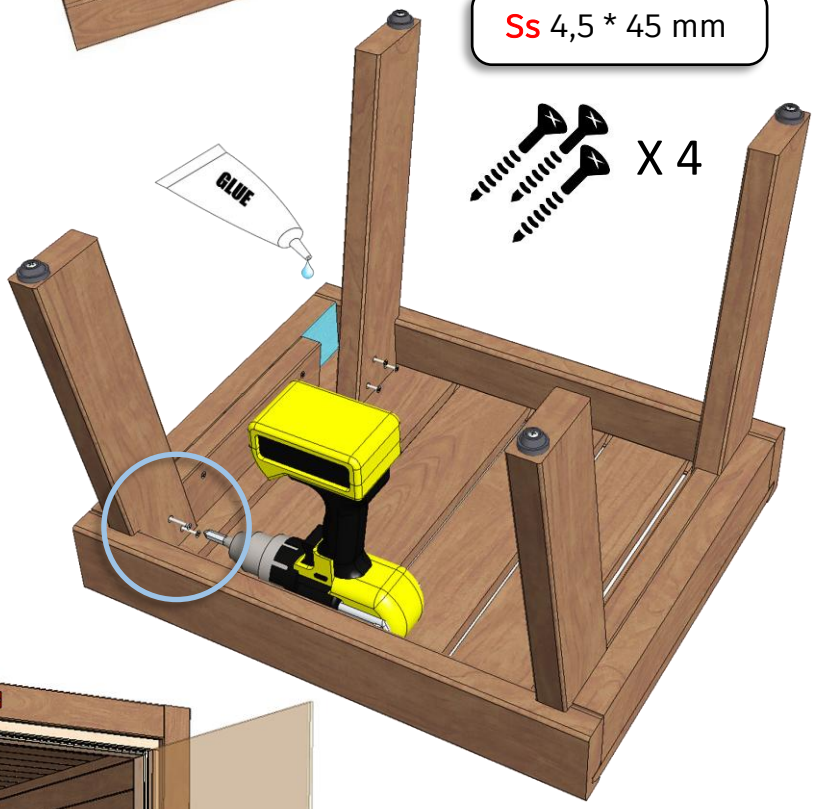
Ss 4,5 * 45 mm
X 4
GLUE



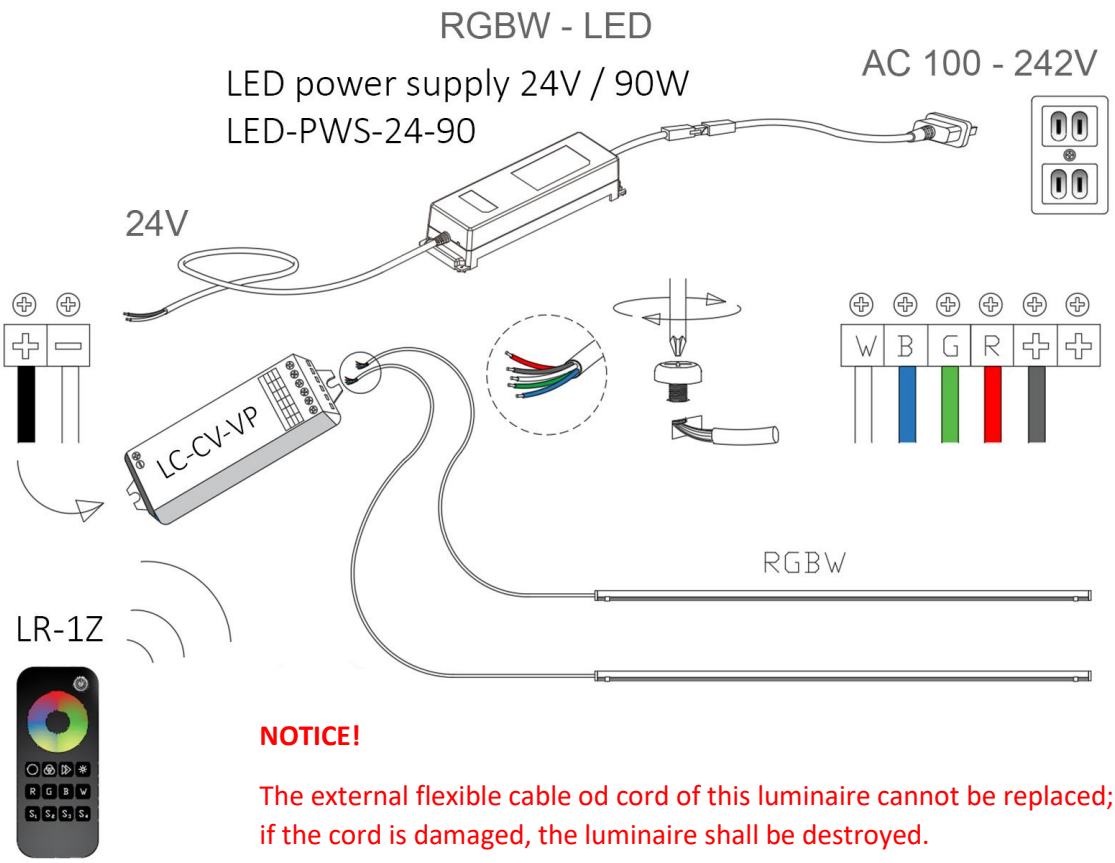

NOTICE!

The external flexible cable od cord of this luminaire cannot be replaced; if the cord is damaged, the luminaire shall be destroyed.

The light source of this luminaire is not replaceable; when the light source reaches its end of life, whole luminaire shall be replaced.

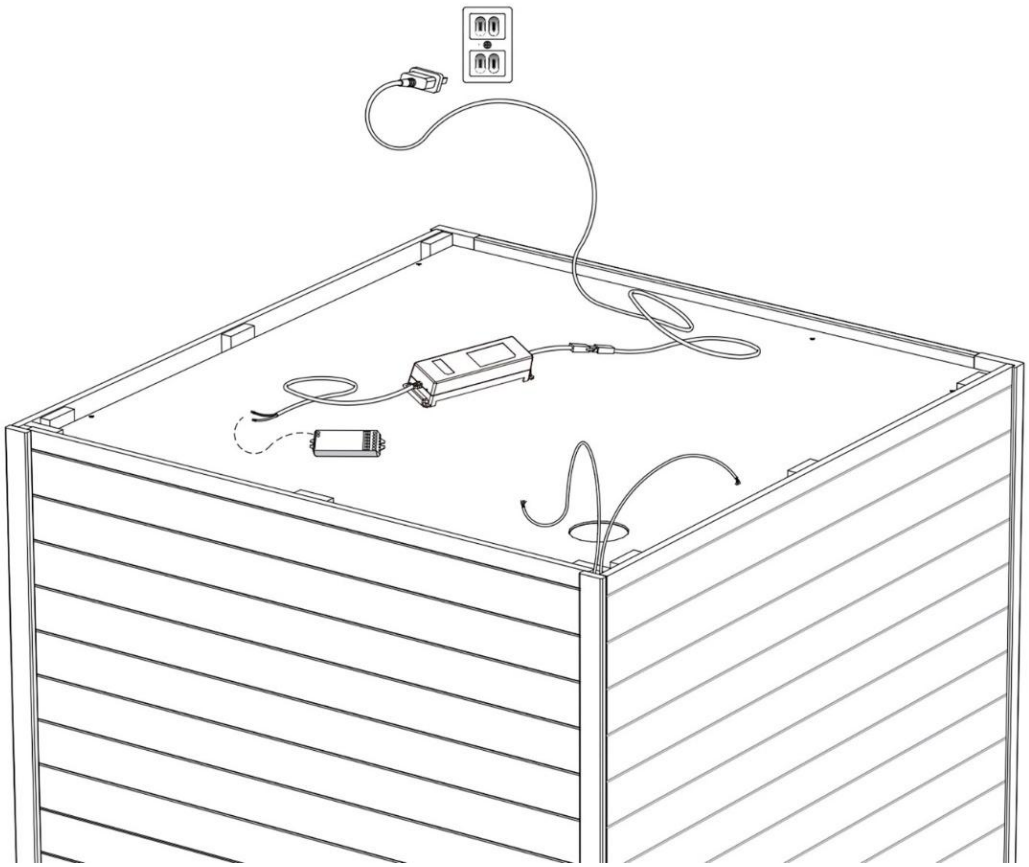



NOTES